fwgKv

GKUv †`k‡K M‡o Zj‡Z n‡j †hgb Wv³vi, BwÄwbqvi, g¨v‡bRvi `iKvi wVK †miKg weÁvbxI `iKvi| Avgiv hLb †QvU wQjvg ZLb ¯c †`LZvg eo n‡q weÁvbx neÑ eo n‡q hLb weÁvb wb‡q GKUAvaU KvR Ki‡Z †c‡iwQ ZLb g‡b n‡q‡Q Gi PvB‡Z gRv Avi Kx n‡Z cv‡i? cw_ex‡Z hZiKg Avb›` Av‡Q Zvi gv‡S me‡P‡q †ewk Avb›` n‡"Q M‡elYv‡Z– hviv †mUv K‡i‡Q Zviv †mUv Rv‡b| Avgvi Le gvqv nq hLb †`wL AvRKvjKvi †Q‡j‡g‡qiv Avi weÁvbx n‡Z Pvq bv– Zviv ïa Wv³vi, BwÄwbqvi Avi g¨v‡bRvi n‡Z Pvq| gv‡S gv‡S `B-GKRb hLb weÁvbx n‡Z Pvq, Zv‡`i evev-gv‡qiv ZLb †Rvi K‡i Zv‡`i Wv³vi, BwÄwbqvi Avi g¨v‡bRvi ˆZwi K‡i †d‡jb| ZvB Avgv‡`i †`‡k GLb PgrKvi me PgrKvi Wv³vi, BwÄwbqvi Avi g¨v‡bRvi wKš weÁvbxi Le Afve!

GB eBUv ZvB †jLv n‡q‡Q weÁv‡bi R‡b¨ GKU AvMn ˆZwi Kivi D‡Ï‡k¨| cw_exi BwZnv‡m weÁv‡bi hZ Awe®vi n‡qQ Zvi gv‡S Ab¨Zg n‡"Q w_lwi Ad wi‡jwUwfwU Ges me‡P‡q PgKc` e¨vcvi n‡"Q ¯‹‡ji MwYZ Rvb‡jB GB w_lwiwU †evSv m¤e| Kv‡RB †Z‡iv †PŠÏ eQ‡ii †Q‡j‡g‡q‡`i j¶¨ K‡i Awg GB eBwU wj‡LwQ–†KD †hb g‡b bv K‡i Le KwVb GKUv wRwbm GKU †Q‡jgvbwl K‡i GLv‡b ejv n‡q‡Q| GLv‡b G‡Kev‡i mwZ¨Kv‡ii w_lwi Ad wi‡jwUwfwUi K_v ejv n‡q‡Q, †KD hw` GUv c‡o

Zvi mewKQ †ev‡S †m e‡K _vev w`‡q ej‡Z cvi‡e, ÒAwg w_lwi Ad wi‡jwUwfwU Rwb!Ó

†KD hw` w_lwi Ad wi‡jwUwfwU Rv‡b ïagvÎ Zv n‡jB †m c_gevi Abfe Ki‡Z cvi‡e Avgv‡`i Pvicv‡ki RMr KZ inm¨gq| Zvi PvB‡Z eo K_v †m eS‡e GB in‡m¨i GKwU côv Zvi R‡b¨ D‡bwPZ n‡q‡Q–mvg‡b Av‡iv bv Rwb Av‡iv KZ côv D‡bwPZ nevi Rb¨ A‡c¶v Ki‡Q|

GB eBUv c‡o GKUv †Q‡j ev †g‡qI hw` wVK K‡i ÒAwg eo n‡q weÁvbx ne Ó, Awg Zv n‡j g‡b Kie Avgvi cwikgUv mv_K n‡q‡Q!

XvKv gn¤§` Rvdi BKevj
26 wW‡m¤i 2007

w_Iwi Ad wi‡jwUwfwU

mwPcÎ

wi‡jwUwfwUi ki

`wU AmvaviY mÎ

AvBb÷vB‡bi †¯úkvj w_lwi Ad wi‡jwUwfwU M‡o D‡V‡Q `wU mÎ w`‡q| mÎ `wU GiKg:

1. c`v_weÁvb me RvqMvq GK
2. Av‡jvi MwZ‡eM me RvqMvq GK

Awg Rwb hviv GB mÎ `wU c‡o‡Q Zviv mevB wbðqB gv_v Pj‡K ej‡Q, G¸‡jv Avevi Kx iKg mÎ n‡jv? Avgiv †Zv Rwb c`v_weÁvb me RvqMvq GKB n‡e–XvKvq c`v_weÁvb wK PÆMv‡gi c`v_weÁvb †_‡K wfb n‡e? Av‡jvi MwZ‡eMI †Zv GKB n‡Z n‡e, mh †_‡K Av‡jv cw_ex‡Z †cŠQv‡Z XvKvq †ewk mgq jvM‡Q PÆMvg Kg mgq jvM‡Q GUv wK n‡Z cv‡i?

Bbviwkqvj †idv‡iÝ †dg

Kv‡RB Avgvi g‡b nq *me RvqMv* ej‡Z Awg Kx †evSw"Q †mUv c_‡gB cwi®vi K‡i †bqv fvj| g‡b K‡iv Zwg GKUv †÷k‡b GKUv †U‡b e‡m AvQ, †Zvgvi mvg‡b Ab¨ GKwU †ijjvB‡b Av‡iKwU †Ub `wo‡q Av‡Q| fxlY Kqvkv c‡o‡Q ZvB Zwg mvg‡bi †Ub Qvov Avi wKQB †`L‡Z cviQ bv| GLb g‡b K‡iv GKUv †Ub Pj‡Z ïi" K‡i‡Q - Zwg wK ej‡Z cvi‡e †KvbUv?

hviv ZK Ki‡Z cQ›` K‡i Zviv ej‡e, ÒAek¨B ej‡Z cvie, †Ub hLb Pj‡Z _v‡K ZLb †ij jvB‡bi mv‡_ NUNU kã nq, †Ub Kv‡c, †`v‡j–Kv‡RB ej‡Z bv cvivi Kx Av‡Q? hLb †`Le Avgvi †Ub Kvc‡Q, `j‡Q, NUNU kã Ki‡Q, eS‡Z cvie Avgvi †UbUv Pj‡Q|Ó

AKvU¨ hw³–ZvB Avgvi KíbvUvI Av‡iKU ewo‡q w`B| Avgiv Kíbv K‡i wbB, `wU †UbB AmvaviY; G¸‡jv hLb Pj‡Z _v‡K ZLb †m¸‡jv Kv‡c bv, †`v‡j bv, NUNU kã K‡i bv|

hviv ZK cQ›` K‡i Zviv ej‡e, ÒRvbvjv w`‡q gv_v †ei K‡i †`e, hw` gv_vq evZvm jv‡M eSe †UbUv Pj‡Q|Ó AwgI ZLb eje, ÒRvbvjv eÜ K‡i †`qv n‡q‡Q, Kv‡Pi †fZi w`‡q ïa mvg‡bi †UbwU †`Lv hv‡"Q, Zvi †ewk wKQ bq|Ó

Avgvi aviYv hviv weÁvb wb‡q Le †ewk gv_v Nvgvq bv, ïa ZK Ki‡Z cQ›` K‡i Zviv G chv‡q G‡m †_‡g hv‡e, †Kvb †UbwU Pj‡Q †m wKQ‡ZB ej‡Z cvi‡e bv| †Zvgv‡`i †fZi hviv weÁvb wb‡q wPšvfvebv K‡iv Zviv nq‡Zv GZ mn‡R n‡j †Q‡o †`‡e bv, Zviv ej‡e, Ò†UbUv wVK hLb mvg‡b Pj‡Z ïi" K‡i Avgiv ZLb wcQ‡b c‡o †h‡Z PvB| ZvB Avgiv †`Le Avgiv c‡o †h‡Z ïi" K‡iwQ wK bv| hw` †`wL wcQ‡b c‡o †h‡Z ïi" K‡iwQ Zvi gv‡b †UbUv mvg‡b Pj‡Z ïi" K‡i‡Q| Avi hw` †`wL mvg‡b ûgwo †L‡q covi Ae¯v n‡q‡Q Zv n‡j eSe †UbUv wcQb w`‡K hv‡"Q| Avi hw` †miKg wKQB nq wb, Zvn‡j ees Avgvi †UbwU Pj‡Z ïi" K‡i wb- Ab¨Uv ïi" K‡i‡Q|Ó AmvaviY hw³ Ges GB hw³ †d‡j †`qvi †Kv‡bv Dcvq †bB| mwZ¨ K_v ej‡Z wK GB hw³ †KD †d‡j †`‡e bv (AvBb÷vBbI †d‡j †`b wb!) Ges GB hw³ e¨envi Kivi R‡b¨ Rvbvjv w`‡q evB‡i ZvKv‡bvI c‡qvRb †bB|

Kv‡RB Awg †Mvov‡Z †h ckUv K‡iwQjvg †mUv Avevi GKU bZbfv‡e Kwi: Òg‡b Kiv hvK Zwg GKUv †U‡b Nwg‡q AvQ Ges hLb Ng †f‡O‡Q ZLb Rvbjv w`‡q evB‡i ZwK‡q †`LQ Ab¨ †UbUv wcQb w`‡K hv‡"Q, Zwg wK ej‡Z cvi‡e, Avm‡j †Zvgvi †UbUv mvg‡bi w`‡K hv‡"Q, bwK Ab¨ †UbUv wcQb w`‡K hv‡"Q?Ó GB c‡ki DËi n‡"Q, †UbUv hw` mg‡e‡M hvq, MwZi †Kv‡bv cwieZb bv nq Zv n‡j †Kv‡bvfv‡eB ej‡Z cvi‡e bv! †Zvgvi †UbUv‡K w¯i a‡i, Ab¨ †UbwU wcQb w`‡K hv‡"Q ejv †h K_v, Ab¨ †UbwU‡K

w¯i a‡i †Zvgvi †UbwU mvg‡b hv‡"Q ejv GKB K_v - GB `B‡qi gv‡S †Kv‡bv cv_K¨ †bB| mwZ¨ K_v ej‡Z Kx hw` Zjbv Kivi R‡b¨ Av‡kcv‡k wKQ bv _v‡K A_vr wekeþv‡Ê hw` GB `‡Uv †Ub Qvov Avi wKQB bv _v‡K Zvn‡j, Avm‡j †KvbwU Pj‡Q Avi †KvbwU `wo‡q Av‡Q †mUv †ei Kivi †Kv‡bv Dcvq †bB!

GLb Zwg hw` †Zvgvi †U‡b e‡m c`v_ weÁv‡bi †Kv‡bv cix¶v Ki Avi †Zvgvi eÜI hw` Ab¨ †U‡b e‡m †mB cix¶v K‡i Zv n‡j `R‡bi cix¶vi djvdj, gvc, cwigvc, Z_¨ DcvË wfb n‡Z cv‡i wKš †`L‡e c`v_weÁv‡bi mÎ¸‡jv GK| AvBb÷vB‡bi †¯úkvj w_lwi Ad wi‡jwUwfwUi mÎ `wU ejvi mgq hLb ejv n‡qwQj *me RvqMvq* ZLb Avm‡j †evSv‡bv n‡qwQj GKwU w¯i Ae¯v‡bi Zjbvq mg‡e‡M Pj‡Z _vKv Ab¨ me Ae¯vb¸‡jv‡K| c`v_weÁv‡bi fvlvq Gi GKUv Mvjfiv bvg Av‡Q, †mUv n‡"Q Bbviwkqvj †idv‡iÝ †dg (Intertial Reference Frame) | Avgv‡`i D`vni‡Y `wU †Ub wQj `wU Bbviwkqvj †idv‡iÝ †dg| Kv‡RB hLb GKUv Ae¯v‡bi mv‡_ Av‡iKUv Ae¯v‡bi cwieZb nq mg‡e‡M (†Kv‡bv ZiY nq bv) ZLb Zv‡`i e‡j Bbviwkqvj †idv‡iÝ †d‡g| AvBb÷vBb hLb *†¯úkvj w_lwi Ad wi‡jwUwfwU* e‡j‡Qb ZLb *†¯úkvj* K_vUv w`‡q GUvB ewS‡q‡Qb| GKUvi Zjbvq Ab¨Uv mg‡e‡M, †Kv‡bv ZiY †bB| hw` GKUvi Zjbvq Ab¨Uvi ZiY nq Zv n‡j Zvi R‡b¨ †h w_lwi Ad wi‡jwUwfwUi `iKvi †mUvI AvBb÷vBb †ei K‡i‡Qb - Zvi bvg n‡"Q †Rbv‡ij w_lwi Ad wi‡jwUwfwU| †¯úkvj w_lwi Ad wi‡jwUwfwU †evSvi R‡b¨ ¯‹j K‡j‡Ri MwYZ Rvb‡jB P‡j, †Rbv‡ij w_lwi Ad wi‡jwUwfwUi R‡b¨ †mwU mwZ¨ bq, †mUv †evSvi R‡b¨B A‡bK DP chv‡qi bZb wKQ MwYZ Rvb‡Z nq| ZvB Avgiv GB eB‡q †¯úkvj w_lwi Ad wi‡jwUwfwUi gv‡SB Avgv‡`i Av‡jvPbvUK‡K †e‡a ivLe|

Av‡cw¶K MwZ

Kv‡RB Avgiv †¯úkvj w_lwi Ad wi‡jwUwfwUi mÎ `‡Uv Gev‡i Av‡iKU LwU‡q †`wL| c_g mÎUv ej‡Q †Kv‡bv w¯i Ae¯vb ev j¨ve‡iUwi‡Z c`v_weÁv‡bi †h mÎ cvIqv hv‡e, GKUv mgvb †e‡M Pj‡Z _vKv †U‡b ev

gnvKvkhv‡bI †mB GKB mÎ cvIqv hv‡e| GB mÎUv wb‡q †KD we‡kl AvcwË Ki‡e bv| wKš wØZxq mÎwU wb‡q †Zvgv‡`i †KD †KD AvcwË Ki‡Z cv‡i, †mLv‡b ejv n‡q‡Q Av‡jvi †eM GKUv w¯i Ae¯v‡b ev w¯i j¨ve‡iUwi‡Z hv, GKUv mg‡e‡Mi MwZkxj Ae¯vb ev Pjš †U‡bI Zv| Av‡jvi †eM GZ `"Z †h Avgv‡`i ‰`bw›`b Rxe‡b g‡b nq GUv ewS Zvr¶wYK GKUv e¨vcvi, ZvB †mUv Kg bv †ewk Avgiv †Ui cvB bv| Kv‡RB Av‡jvi †e‡Mi e¨vcviUv AvcvZZ ¯wMZ †i‡L Ab¨wKQi †eM GKU LwU‡q †`wL| w¯i Ae¯v †_‡K GKUv Q‡U hvIqv wRwbm †`L‡j Avgiv hv †`Le, Pjš ev MwZkxj Ae¯vb †_‡KI wK Avgiv †mUv †`Le? KL‡bvB bv| me‡P‡q mnR D`vniY n‡"Q Pjš †Ub, hw` `‡Uv †Ub cvkvcwk GKB †e‡M Pj‡Z _v‡K Zv n‡j GKUv †Ub †_‡K g‡b n‡e Ab¨ †UbUvi MwZ‡eM ewS kb¨| †ij jvB‡bi KvQvKwQ hviv `wo‡q Av‡Q ZvivB †`L‡e `wU †Ub nq‡Zv S‡oi †e‡M Q‡U hv‡"Q| †miKg Zwg hw` Pjš †U‡b e‡m nv‡Z GKwU ej a‡i ivL Zvn‡j †Zvgvi Kv‡Q g‡b n‡e ejUv w¯i| wKš †ijjvB‡bi cv‡k gwU‡Z `wo‡q _vKv GKRb hw` ïagvÎ ejUvi w`‡K ZwK‡q _v‡K Zv n‡j †m †Zv ejUv‡K w¯i †`L‡e bv, †m †`L‡e ejUv Q‡U hv‡"Q| wVKfv‡e ej‡j ej‡Z n‡e †U‡bi †hUK MwZ g‡b n‡e ejUvi wVK †mB MwZ| Avgv‡`i ^^bw›`b Rxe‡bI Avgiv †mUv †`‡LwQ, †Ljvi gv‡V †QvUvQwU Kivi mgq hLb `Rb GKB w`‡K †`Šov‡Z †`Šov‡Z GKR‡bi mv‡_ Av‡iKR‡bi av°v jv‡M ZLb †mUv mvaviYZt Ggb wKQ nq bv—Zvi KviY GKR‡bi Zjbvq Av‡iKR‡bi †eM ev Av‡cw¶K †eM n‡"Q †e‡Mi cv_K¨ †hUv Le Kg| wKš hw` GKRb Av‡iKR‡bi g‡LvgwL Q‡U G‡m av°v jvMvI Zv n‡j `R‡biB Ae¯v Lvivc n‡q hvq KviY ZLb Av‡cw¶K MwZ n‡e `R‡bi mw¤§wjZ †eM|

Avgiv B‡"Q Ki‡j GB Av‡cw¶K MwZi R‡b¨ Le mnR GKUv mÎ †ei Ki‡Z cwi| aiv hvK Avgiv w¯i Ae¯v‡b ev GKUv †ij‡÷k‡b `wo‡q AwwQ Ges †`LwQ †UbjvBb a‡i GKUv †Ub hv‡"Q hvi MwZ‡eM v_1 n‡"Q N›Uvq 50 wK‡jwgUvi| aiv hvK †UbjvB‡bi cv‡k GKUv iv¯v, †mB iv¯v w`‡q GKUv Mvwo GKB w`‡K hv‡"Q hvi MwZ‡eM v_2 NÈvq 30 wK‡jwgUvi| Zv n‡j:

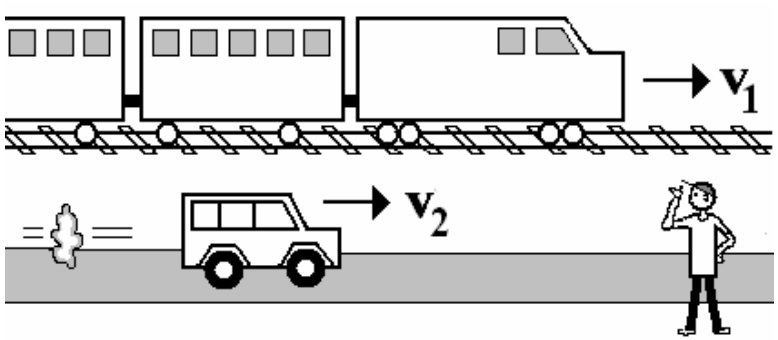

1 bs Qwe: iv¯vi cv‡k `vov‡bv c_Pvixi Zjbvq †U‡bi Av‡cw¶K MwZ v_1 Mwoi Av‡cw¶K MwZ v_2, †U‡bi Zjbvq Mwoi Av‡cw¶K MwZ $(v_2 - v_1)$ Mvoxi Zjbvq †U‡bi Av‡cw¶K MwZ $(v_1 - v_2)$

w¯i †÷k‡bi Zjbvq †U‡bi MwZ‡eM: $v_1 - 0 = 50km/h$

Mwoi Zjbvq †U‡bi MwZ‡eM: $v_1 - v_2 = 50\text{-}30 = 20\ km/h$

†U‡bi Zjbvq †U‡bi MwZ‡eM: $v_1 - v_1 = 0\ km/h$

wVK †mfv‡e:

w¯i †÷k‡bi Zjbvq Mwoi MwZ‡eM: $v_2 - 0 = 30km/h$

Mwoi Zjbvq Mwoi MwZ‡eM: $v_2 - v_2 = 0\ km/h$

†U‡bi Zjbvq Mwoi MwZ‡eM: $v_2 - v_1 = 30 - 50 = -20\ km/h$

GLv‡b GKwU wb‡MwUf wPý P‡j G‡m‡Q, hvi A_ †U‡bi MwZ †hw`‡K Mwoi Av‡cw¶K MwZ Zvi D‡ëw`‡K! A_vr †KD hw` †U‡b e‡m Mwoi w`‡K ZwK‡q _v‡K (Ges Avi Ab¨ wKQi w`‡K bv ZvKvq!) Zv n‡j †`L‡e †U‡bi mv‡c‡¶ MwoUv D‡ëw`‡K hv‡"Q|

Gev‡i Avgiv hw` a‡i wbB †Ub †hw`‡K hv‡"Q MwowU hv‡"Q Zvi D‡ëw`‡K, A_vr

†U‡bi MwZ‡eM: $v_1\ km/h$

Mwoi MwZ‡eM: $-v_2\ km/h$

MvoxUv †h‡nZ D‡ëw`‡K hv‡"Q ZvB Zvi MwZ‡eM Avgiv GKUv wb‡MwUf wPý ewm‡qwQ|

Zv n‡j Avgiv †`Le:

Mwoi Zjbvq †U‡bi MwZ‡eM: $v_1 - (-v_2) = v_1 + v_2\ km/h$

†U‡bi Zjbvq Mwoi MwZ‡eM: $v_2 - v_1 = -(v_1 + v_2)\ km/h$

Avgiv †U‡bi MwZ‡eMwU cwRwUf a‡iwQ A_vr †Kvb MwZ‡eM hw` cwRwUf nq Zv n‡j eS‡Z n‡e †mUv †U‡bi w`‡K Avi hw` wb‡MwUf nq Zv n‡j eS‡Z n‡e †mUv †U‡bi MwZ‡e‡Mi D‡ëw`‡K|

GB mnR welqUv GZ LwUbwU mn K‡i †`Lv‡bvi GKUv KviY Av‡Q, Avgiv †evSv‡bvi †Póv K‡iwQ hw` `wU e¯i MwZ‡eM GKB w`‡K _v‡K Zv n‡j Zv‡`i Av‡cw¶K MwZi cwigvY n‡"Q Zv‡`i MwZ‡e‡Mi cv_K¨ Avi hw` weciwZ w`‡K _v‡K Zv n‡j Zv‡`i Av‡cw¶K MwZ n‡"Q Zv‡`i MwZ‡e‡Mi †hvMdj|

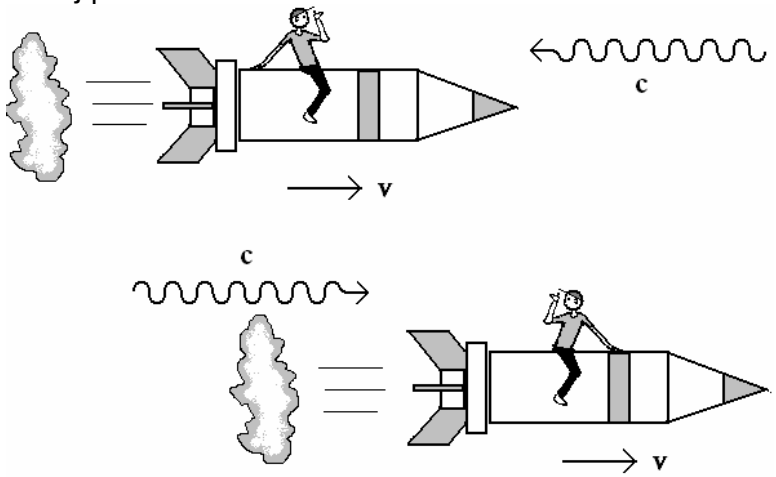

2 bs Qwe: i‡K‡Ui hvÎxi Kv‡Q Av‡jvi MwZ‡eM Kx Dc‡ii †ejvq $(c + v)$ Ges wb‡Pi †ejvq $(c - v)$?

MwZi †hvMdj

Gev‡i Zv n‡j 2 b¤i Qwei e¨vcviwU †`Lv hvK, GKRb gnvKvkPvix i‡K‡U K‡i hv‡"Q, Zvi i‡K‡Ui †eM $v$, wVK ZLb Zvi w`‡K weciwZ w`K †_‡K Av‡jvKiwk‡ Q‡U G‡m‡Q hvi MwZ n‡"Q c| GLb wK gnvKvkPvixi Kv‡Q g‡b n‡e Zvi i‡K‡Ui Zjbvq Av‡jvi Av‡cw¶K MwZ n‡"Q $(c + v)$? Avevi hLb

i‡K‡Ui wcQb †_‡K Zvi w`‡K Av‡jvK iwk¦ Q‡U Avm‡e ZLb Zvi MwZ‡eM g‡b n‡e $(c - v)$? `B †¶‡Îb Avgiv †`LwQ Av‡jvi MwZ nq †e‡o hv‡"Q, bv nq K‡g hv‡"Q|

AvBb÷vB‡bi †¯úkvj w_lwi Ad wi‡jwUwfwU wKš ej‡Q, Av‡jvi MwZ‡eM n‡"Q c, †m hw` mvg‡b †_‡K $v$ †e‡M Q‡U hvIqv i‡KU‡K AvNvZ K‡i ZLbI gnvKvkPvixi Zjbvq Zvi MwZ‡eM n‡"Q $c$ Avevi hw` wcQb †_‡K Q‡U Av‡m ZLbI gnvKvkPvixi Kv‡Q g‡b n‡e MwZ‡eM $(c - v)$ bq MwZ‡eM n‡"Q c! e¨vcviUv wekvm‡hvM¨ g‡b bv n‡jI mwZ¨| weÁvbxiv bvbvfv‡e cix¶v K‡i †`‡L‡Qb †h Avm‡jB †hfv‡eB ev †hLv‡bB Av‡jvi MwZ‡eM gvcv †nvK me mg‡qB Av‡jvi †eM _v‡K mgvb| Kv‡RB GUv wb‡q ZK weZK bv K‡i AvBb÷vB‡bi †¯úkvj w_lwi Ad wi‡jwUwfwUi wØZxq mÎwU wekvm K‡i wb‡q Avgiv wK GKU AMmi n‡Z cvwi? (AvBb÷vBb hLb Zvi wØZxq m‡Î e‡jwQ‡jb Av‡jvi †eM me RvqMvq mgvb, ZLb wZwb wKš †Kv‡bv gvcvgwc K‡i e‡jb wb wZwb e‡jwQ‡jb †f‡e Av‡jvi Zi‡½i K‡qKUv mgxKiY‡K i¶v Kivi R‡b¨ GUv `iKvi wQj|

†ijMvwo Avi Mvwoi D`vni‡Y Avgiv †`‡LwQ hLb GKUv MwZkxj e¯i w`‡K Av‡iKwU MwZkxj e¯ Q‡U Av‡m ZLb GKUvi Zjbvq Ab¨Uvi MwZ‡eM n‡"Q `‡Uv †e‡Mi †hvMdj| wKš †mB wbqgUv wKš Av‡jvi †ejvq LvU‡e bv– AvBb÷vBb‡K wekvm K‡i †Rvi K‡i †mUv LwU‡q wb‡j †Kgb nq? n‡Z cv‡i Avgiv hLb GKUv MwZkxj e¯i Zjbvq Av‡iKUv MwZkxj e¯i Av‡cw¶K MwZ †ei K‡iwQjvg ZLb ïa `‡Uv †eM †hvM (wKsev we‡qvM) Kivi K_v bv– Zvi mv‡_ mv‡_ Ab¨ wKQ w`‡q fvMI †`evi K_v! Awg Rwb Gfv‡e †KD mÎ †ei K‡i bv–wKš †Póv K‡i †`L‡Z ¶wZ Kx? aiv hvK Avmj mÎwU $(v + c)$ bq, †mUv‡K k w`‡q fvM w`‡Z nq| †hb

$$\frac{c + v}{k} = c$$

AvBb÷vB‡bi wØZxq mÎwU †Rvi K‡i mwZ¨ K‡i †djv nj! GLvb †_‡K k-Gi gvb †ei Kiv mnR,

$$k = \frac{v + c}{c} = 1 + \frac{v}{c}$$

Kv‡RB †Kv‡bv MwZkxj e¯ †hUv v †e‡M hv‡"Q †mLv‡b mvg‡b Av‡jv G‡m co‡j MwZkxj e¯wUi Zjbvq Av‡jvi †eM n‡e:

Av‡jvi Av‡cw¶K MwZ = $\dfrac{c + v}{1 + \dfrac{v}{c}}$

hw` Av‡jvUv †cQb †_‡K Av‡m Zvn‡j v-Gi RvqMvq wjL‡Z n‡e $-v$ A_vr mÎwU n‡e,

Av‡jvi Av‡cw¶K MwZ = $\dfrac{c - v}{1 - \dfrac{v}{c}}$

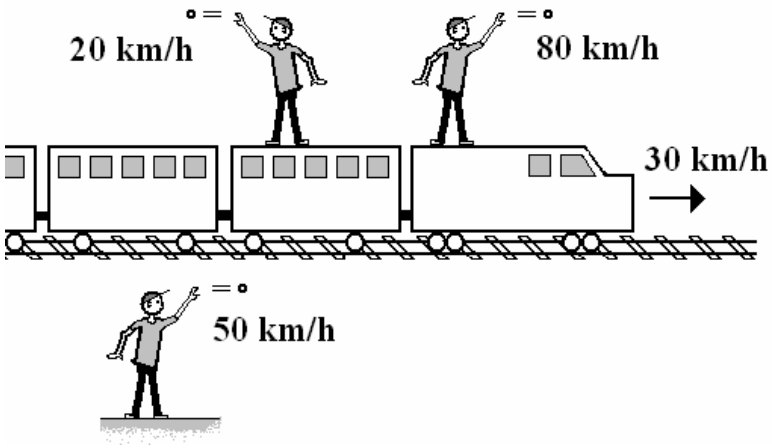

3 bs Qwe: 30 km/h †e‡M Q‡U hvIqv †U‡bi Qv` †_‡K *50 km/h* †e‡M †U‡bi mvg‡bi w`‡K wXj Qo‡j wb‡P `vov‡bv GKR‡bi g‡b n‡e wXjUv hv‡"Q 80 *km/h* †e‡M| Avevi wcQb w`‡K Q‡o w`‡j wb‡P `vov‡bv GKR‡bi g‡b n‡e wXjUv †Qvov n‡q‡Q *20 km/h* †e‡M|

Awg Rwb mevB GB †Q‡jgvbwI KvRwU †`‡L gPwK nvm‡Q–wKš gRvi e¨vcvi nj, GUvB n‡"Q mwVK mÎ! Avgiv †Kv‡bwKQ bv K‡i c`v_weÁv‡bi KZ eo GKUv mÎ †ei K‡i †d‡jwQ †KD †Lqvj K‡i‡Q?

Avgiv †h-mÎUv †ei K‡iwQ †mUv ïa †h evB‡i †_‡K Av‡jv G‡m co‡jB mwZ¨ nq Zv bq, †Kv‡bv GKUv Ae¯vb †_‡K Av‡jv †ei n‡j Zvi R‡b¨I mwZ¨| aiv hvK Avgiv *50 km/h* †e‡M wXj Qo‡Z cwi| Avil aiv hvK GKUv †Ub *30 km/h* †e‡M hv‡"Q, Avgiv hw` †mB †U‡bi Qv‡` `wo‡q mvg‡bi w`‡K GKUv wXj Qwo Zv n‡j wb‡P gwU‡Z `wo‡q _vKv GKR‡bi Kv‡Q g‡b wXjUv hv‡"Q *(50 + 30) = 80 km/h* †e‡M| Avevi hw` wXjUv D‡ëw`‡K †Qvov nq Zvn‡j wb‡P `wo‡q _vKv GKR‡bi g‡b n‡e wXjUv hv‡"Q *(50 – 30) = 20 km/h* †e‡M (3 bs Qwe)|

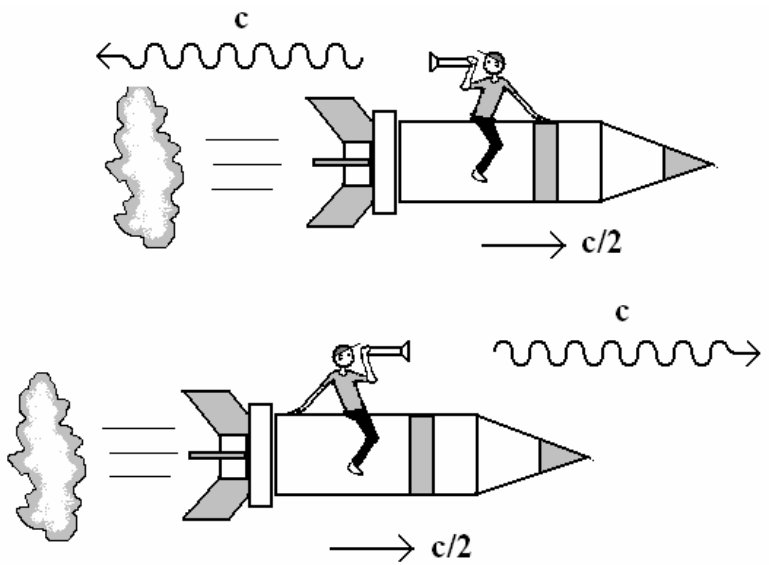

4 bs Qwe: *c/2* †e‡M Q‡U hvIqv GKUv i‡KU †_‡K Av‡jv mvg‡b wcQ‡b †hw`‡KB cvVv‡bv †nvK, Zvi †eM n‡"Q *c*.

GB GKB cix¶vUv hw` Av‡jvKiwk‡ w`‡q Kiv nq (4 bs Qwe:) Zv n‡j wKš Avgiv m¤úY wfb GKUv e¨vcvi †`Le| Ggwb‡Z Av‡jvi †eM n‡"Q *c*, GKUv gnvKvkhvb Q‡U hv‡"Q *c/2* †e‡M, †mLvb †_‡K GKUv d¨vkjvBU w`‡q Av‡jv hw` gnvKvkhv‡bi mvg‡bi w`‡K cvVv‡bv nq Zv n‡j Avgiv Avgv‡`i mÎ e¨envi K‡i cvB:

$$\frac{\frac{c}{2} + c}{1 + \frac{\frac{c}{2}}{c}} = c$$

wVK GKBfv‡e Av‡jv hw` wcQb w`‡K cvVv‡bv nq Zvn‡j Av‡jvi †eM n‡e:

$$\frac{c - \frac{c}{2}}{1 - \frac{\frac{c}{2}}{c}} = c$$

Avgiv hZB †Póv Kwi Av‡jvi †eM‡K Avgiv evov‡ZI cvie bv, Kgv‡Z cvie bv| †mwU memg‡qB n‡"Q *c* !

Av‡jvi †eM

†evSvB hv‡"Q AvBb÷vB‡bi †¯úkvj w_lwi Ad wi‡jwUwfwUi mv‡_ Av‡jvi †e‡Mi GKUv LeB Nwbô m¤úK i‡q‡Q| wi‡jwUwfwU msµvš–AvBb÷vB‡bi wØZxq mÎwU Avgiv hw` Av‡iKU LwU‡q †`wL Zv n‡j †`Le †mUv Avm‡j ej‡Q Avgiv hZB †Póv Kwi bv †Kb †Kv‡bvfv‡eB Av‡jv‡K Zvi MwZ‡eM c †_‡K `"Z cvVv‡Z cvie bv, hvi A_ mwóRM‡Z GKUv *Pig †eM* i‡q‡Q hvi †_‡K †ewk nIqv m¤e bv| †mB †eMwU †c‡Z cv‡i ïagvÎ Av‡jv–hvi †Kv‡bv fi †bB| †h-e¯i fi Av‡Q Avgiv hZB †Póv Kwi bv †Kb KL‡bvB Zvi MwZ‡eM Av‡jvi †e‡Mi mgvb Ki‡Z cvie bv|

Av‡jvi GB †eMwU Le m² fv‡e gvcv n‡q‡Q| †Kv‡bv gva¨‡gi †fZi w`‡q hw` bv †h‡Z nq Zv n‡j Av‡jvi †eM n‡"Q:

$$c = 299\,792\,458 \; m/s$$

Avgiv Avgv‡`i ^`bw›`b Rxe‡b GUv‡K mnR K‡i wjwL:

$$c = 3.0 \times 10^8 \; m/s$$

`kwg‡Ki ci GKNi chš ï× wjL‡Z n‡j †jLv DwPZ $3.0 \times 10^8$ m/s, `B Ni ï× wjL‡Z n‡j wjL‡Z n‡e 3.00×10^8 *m/s*, wZb Ni chš wjL‡Z n‡j wjL‡Z n‡e 2.998×10^8 *m/s*.

Av‡jvi GB †eMwU n‡”Q hLb †mwU †Kv‡bv gva¨‡gi †fZi w`‡q hv‡”Q bv ZLbKvi †eM, hw` GwU †Kv‡bv gva¨‡gi †fZi w`‡q hvq ZLb †mB gva¨‡gi cwZmvi v‡¼i Abcv‡Z †eMwU K‡g Av‡m| cwbi cwZmvi v¼ 1.33 ZvB cwb‡Z Av‡jvi †eM n‡”Q:

$$3.0\times10^8 / 1.33 = 2.26 \times 10^8\ m/s,$$

Kv‡Pi cwZmvi v¼ 1.45, Kv‡RB Kv‡P Av‡jvi †eM n‡”Q:

$$3.0\times10^8 / 1.45 = 2.07 \times 10^8\ m/s,$$

A_vr dvBevi AcwUK †K‡e‡ji †fZi w`‡q Av‡jv hvq Zvi mwZ¨Kvi †e‡Mi `B-ZZxqvsk †e‡M! †Kv‡bv gva¨‡gi †fZi w`‡q hLb Av‡jv hvq ZLb †mwU m¤úY wfb GKwU e¨vcvi- w_lwi Ad wi‡jwUwfwUi mv‡_ Zvi †Kv‡bv m¤úK †bB|

AvBb÷vB‡bi w_lwi Ad wi‡jwUwfwU Abhvqx Av‡jvi †eM n‡”Q m‡ev”P †eM, Av‡jv GB †e‡M hvq Ges †Kv‡bvfv‡eB Gi †eM evov‡bv †Zv m¤e bqB, Kgv‡bvI m¤e bq| 1968 mv‡j mBRvij¨v‡Ûi CERN j¨ve‡iwU‡Z wbDUvj cv‡qvb bv‡g GKai‡bi KYv ˆZwi Kiv n‡qwQj hvi MwZ‡eM wQj 0.99915c GB wbDUvj cv‡qvbvi ˆewkó¨ n‡”Q GLvb †_‡K `wU Av‡jvi KYv †ei n‡q Av‡m| G¸‡jv Le kw³kvjx Av‡jvi KYv–G‡`i‡K e‡j Mvgv †i| GB cv‡qvb †_‡K Mvgv †i †ei nq Av‡jvi MwZ‡Z, cv‡qvbUv wb‡RB hv‡”Q Av‡jvi KvQvKwQ MwZ‡Z, Zvi c‡il †`Lv †M‡Q Mvgv †i -Gi MwZ wKš c, Zvi †_‡K GKUI †ewk bq wVK †hfv‡e AvBb÷vBb e‡jwQ‡jb| GiKg AmsL¨ cix¶v K‡i †`Lv †M‡Q Av‡jvi MwZ n‡”Q mwóRM‡Zi m‡ev”P MwZ Ges Gi PvB‡Z †ewk MwZ m¤e bq| GB MwZ †c‡Z cv‡i ïagvÎ †mBme KYv hvi †Kv‡bv fi †bB| hw` Kv‡iv fi _v‡K Zv n‡j hZB †Póv Kiv hvK Zvi †eM †Kv‡bvfv‡eB Av‡jvi †e‡M †bqv m¤e bv| 5 bs Qwe‡Z kw³ c‡qv‡Mi mv‡_ mv‡_ Kxfv‡e B‡jKU‡bi †eM †e‡o †h‡Z _v‡K †mUv †`Lv‡bv n‡q‡Q|

cPÛ kw³ c‡qvM K‡i B‡jKU‡bi MwZ‡eM 0.999 999 999 95 *c* chš Kiv m¤e n‡q‡Q| †mUv Av‡jvi †e‡Mi LeB KvQvKwQ wKš ZeI Av‡jvi †eM bq, Av‡jvi †eM †_‡K Kg| Avgiv hZ kw³B c‡qvM Kwi bv †Kb †mUv

Av‡jvi †e‡Mi KvQvKwQ †cŠQv‡Z cvi‡e wKš KL‡bvB Av‡jvi †e‡Mi mgvb n‡Z cvi‡e bv|

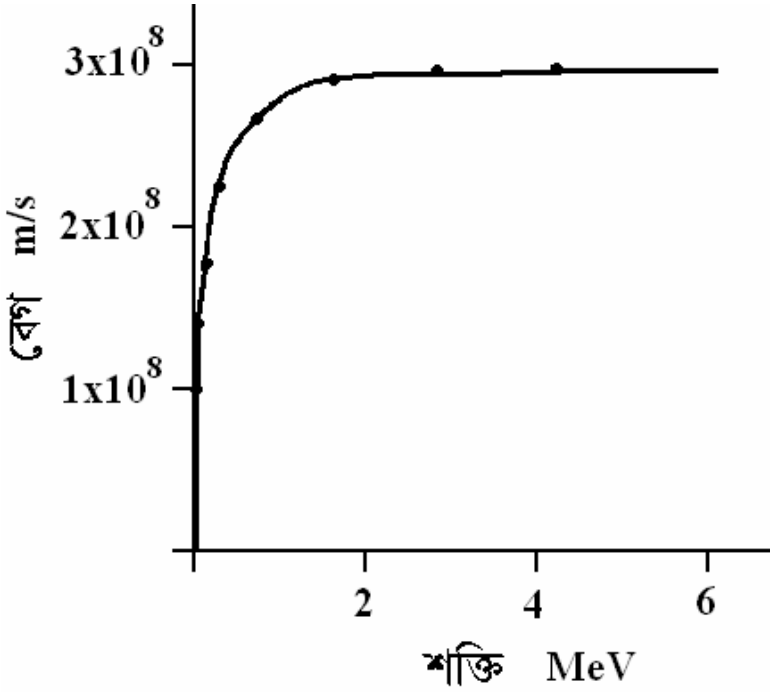

5 bs Qwe: kw³ hZB evov‡bv †nvK B‡jKU‡bi MwZ wKQ‡ZB Av‡jvi MwZ (3×10^8 m/s) Gi mgvb Kiv hvq bv wKsev Av‡jvi MwZ †_‡K evov‡bv hvq bv|

Gi gv‡S †Kv‡bv inm¨ †bB, Avgiv hLb w_lwi Ad wi‡jwUwfwU Av‡iKU LwU‡q †`Le ZLbB e‡S hve Kxfv‡e GUv n‡”Q, †Kb GUv n‡”Q!

Av‡cw¶K mgq

mg‡qi cmviY

AvBb÷vB‡bi `wU mÎ hw` Avgiv mwZ¨ mwZ¨ wekvm K‡i _wK Zv n‡j †m¸‡jv e¨envi K‡i Avgiv GLb †Pv‡Li cj‡K weÁv‡bi me‡P‡q inm¨gq e¨vcviwU †ei K‡i †dje| †mUv †ei Kivi R‡b¨ ïa Avgv‡`i Kíbv Ki‡Z n‡e †Zvgvi eÜ GKUv Nwo wb‡q †U‡b K‡i hv‡"Q Avi Zwg †ij‡÷k‡b `wo‡q Zvi NwoUvi w`‡K ZwK‡q mgq gvcvi †Póv KiQ|

Nwoi †fZi bvbviKg KjKâv _v‡K, Zvi †fZ‡i bvbv wKQ NU‡Z _v‡K, ZvB Avgiv Avgv‡`i Kv‡Ri R‡b¨ GKUv Le mnR Nwo Kíbv K‡i wbB| Avgv‡`i Nwo n‡e `wU g‡LvgwL Avqbv, GKUv wb‡P Av‡iKUv Zvi †_‡K D `iZ Dc‡i| Kíbv K‡i bvI Av‡jv wb‡Pi Avqbv †_‡K ïi" K‡i Lvov Dc‡ii w`‡K (6 bs Qwe) hv‡"Q, Dc‡ii Avqbvq cwZdwjZ n‡q †mUv Avevi wb‡Pi Avqbvq wd‡i Avm‡Q| GK Avqbv †_‡K Ab¨ Avqbvq hvevi mgqUK‡K GKUv bvg w`B: †mUv n‡"Q Nwoi GK wKK! Avgiv hw` mgq‡K gvc‡Z PvB Zv n‡j wK‡Ki msL¨v w`‡q gvce| (e¨vcviUv Ggb wKQ AvR¸we bq, †cÛjvg Nwo‡Z †cÛjvg GKevi N‡i Avmvi mgq n‡"Q GK †m‡KÛ| Avgv‡`i `B Avqbvi gvSLv‡bi `iZ hw` nq $30cm$ Zv n‡j GB Nwoi GK wK‡Ki mgq n‡"Q $10^{-9}s$ ev GK b¨v‡bv †m‡KÛ! A_vr GUv w`‡q Avgiv Le m² fv‡e mgq gvc‡Z cvie|)

Gev‡i Avgiv Avgv‡`i KvR ïi" Kwi, Kíbv K‡i wbB Avgv‡`i †UbUv Pj‡Q v †e‡M Ges GB †U‡bi †fZ‡i †Zvgvi eÜ e‡m Zvi Nwoi cwZ

wK‡Ki mgq gvcvi †Póv Ki‡Q| GB mgqUv‡K hw` Avgiv t_0 ewj Zv n‡j 6 bs Qwe †_‡K ejv hvq

$$t_0 = \frac{D}{c}$$

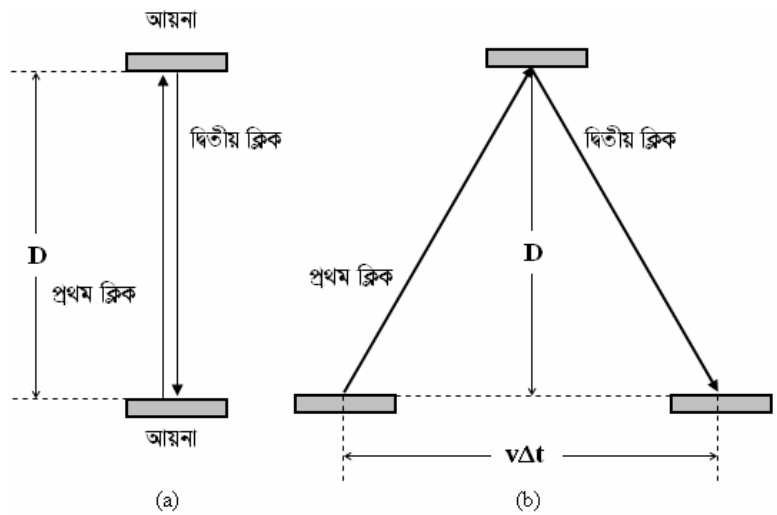

6 bs Qwe: (a) †U‡b e‡m _vKv GKRb †`L‡Q Av‡jvKiwk¥ wb‡Pi Avqbv †_‡K Dc‡ii Avqbvq wM‡q cwZdwjZ n‡q Avevi wb‡Pi Avqbvq wd‡i Avm‡Q| mgq †j‡M‡Q $2D/c$

(b) †÷k‡b `wo‡q _vKv GKRb †`L‡e wb‡Pi Avqbv †_‡K †h Av‡jvKiwkwU †ei n‡q‡Q †mwU hLb Dc‡ii Avqbvq †cŠ‡Q ZLb †mwU Av‡Mi RvqMvq †bB, Wvbw`‡K m‡i †M‡Q| Av‡jvwU cwZdwjZ n‡q hLb wb‡Pi Avqbvq †cŠ‡Q ZLb †mwUI Av‡iv Wvbw`‡K m‡i †M‡Q|

Gevi Zwg †÷k‡b `wo‡q †_‡K †Zvgvi eÜi Nwoi wKKUv gvcvi †Póv K‡iv| †h‡nZ †UbUv $v$ †e‡M hv‡"Q Kv‡RB †Zvgvi g‡b n‡e †Zvgvi eÜ Ges wb‡Pi Ges Dc‡ii `wU Avqbv, mewKQB v †e‡M hv‡"Q| Zwg †`L‡e wb‡Pi Avqbv †_‡K Av‡jvUv ilbv w`‡q hLb Dc‡ii Avqbv‡K AvNvZ K‡i‡Q ZLb †mUv †U‡bi MwZ‡e‡Mi Kvi‡Y L `iZ m‡i †M‡Q| Kv‡RB Zwg †`L‡e wb‡Pi

Avqbv †_‡K Dc‡ii Avqbvq †h‡Z Av‡jv‡K LwbKUv evowZ `iZ AwZµg Ki‡Z n‡"Q| wc_v‡Mvi‡mi mÎ e¨envi K‡i Zwg †mB `iZUK †ei K‡i †dj‡Z cvi‡e, †mUv n‡"Q:

$$\sqrt{L^2 + D^2}$$

GB `iZwU AwZµg Ki‡Z Av‡jvi KZUK mgq †j‡M‡Q? Gev‡i Avgiv AvBb÷vB‡bi wØZxq mÎwU ¯§iY Kwi, Av‡jvi †eM me RvqMvq‡ZB c, Kv‡RB †Zvgvi eÜi Kv‡QI †mUv wQj c, †Zvgvi Kv‡QI †mUv n‡"Q c hvi gv‡b †U‡b ivLv Nwoi GK wK‡Ki mgqUK †Zvgvi Kv‡Q g‡b n‡e,

$$t = \frac{L^2 + D^2}{c}$$

Aek¨B Avgiv Rwb GLv‡b L n‡"Q t mg‡q †Ub †hUK `iZ AwZµg K‡i‡Q †mUK A_vr

$$L = vt$$

Kv‡RB Avgiv †÷k‡b `wo‡q †_‡K Pjš †U‡bi Nwoi GK wK‡Ki mgqUv‡K wjL‡Z cwi

$$t = \frac{\sqrt{v^2t^2 + D^2}}{c}$$

GUv‡K GKU Ab¨fv‡e †jLv hvq

$$c^2t^2 = v^2t^2 + D^2$$

wKsev $$c^2 - v^2 = D^2$$

†hLv‡b †_‡K GK wK‡Ki mgq †ei Kiv hvq

$$t = \frac{D}{\sqrt{c^2 - v^2}}$$

Wvb cv‡k Dc‡i wb‡P c w`‡q fvM w`‡j Avgiv cvB,

$$t = \frac{\frac{D}{c}}{\sqrt{1 - \frac{v^2}{c^2}}}$$

GLb †Zvgiv GKUv av°v Lvevi R‡b¨ c¯Z nI| †Zvgiv mevB Rvb †Zvgvi eÜ †U‡b e‡m Zvi Nwoi cwZ wK‡Ki mgq †ei K‡iwQj, †mUv wQj

$$t_0 = \frac{D}{c}$$

Kv‡RB Avgiv wjL‡Z cwi,

$$t = \frac{t_0}{\sqrt{1 - \frac{v^2}{c^2}}}$$

GB wbixn mgxKiYwUi w`‡K wKQ¶Y ZwK‡q _v‡Kv KviY GwU n‡"Q weÁv‡bi me‡P‡q inm¨gq mgxKiY¸‡jvi GKwU! GB mgxKiYwU weÁv‡bi mewKQ IjU-cvjU K‡i w`‡qwQj| †Zvgiv wbðqB g‡b †i‡L‡Qv t_0 n‡"Q Nwoi GK wKK †hUv n‡"Q †Zvgvi eÜ †U‡b e‡m †g‡cwQj| t mgqUKI wKš GKB Nwoi wKK, Z‡e †mUv †g‡cQ Zwg, †÷k‡b `wo‡q| mgxKiYwUi w`‡K ZwK‡q †`‡Lv $t$ Avi $t_0$ mgvb bq| $\sqrt{1-\frac{v^2}{c^2}}$ -Gi gvb memg‡qB 1 †_‡K Kg Kv‡RB $t$ Gi gvb memg‡qB $t_o$ †_‡K eo| hvi A_ mgq kvkZ bq| †h Nwoi cwZ wKK †Zvgvi eÜi Kv‡Q $t_o$, †Zvgvi Kv‡Q †mUv $t$ Ges $t$ Gi gvb $t_0$ †_‡K †ewk| †mUv KZ †ewk Zv wbfi Ki‡e $v$ Gi gv‡bi Dci| $t$ Gi gvb hw` Kg nq Zvn‡j cv_K¨UK aZ‡e¨i gv‡S bq wKš v Gi gvb hw` c Gi KvQvKwQ P‡j hvq Zv n‡j we¯§qKi e¨vcvi NU‡Z cv‡i| aiv hvK †Zvgvi eÜ †h-†U‡b e‡mwQj Zvi MwZ‡e $v = 0.99c$ (A_vr Av‡jvi †e‡Mi Le KvQvKwQ) Zv n‡j Avgiv wjL‡Z cwi:

$$t = \frac{t_0}{\sqrt{1 - \left(\frac{0.99\,c}{c}\right)^2}} = \frac{t_0}{\sqrt{0.0199}} = 7\,t_0$$

hvi A_ †Zvgvi eÜ hw` †mB †U‡b `k eQi KwU‡q ‡`q Zvn‡j Zvi eqm evo‡e `k ermi wKš †Zvgvi Rxe‡bi mgq AwZµvš n‡q hv‡e 70 eQi (m¤¢vebv Av‡Q †Zvgvi eÜ wd‡i G‡m †`L‡e Zwg hw` ZL‡bv †e‡Q AvQ Zvn‡j _i _‡i e‡ov n‡q †M‡Qv GgbwK †Zvgvi †Q‡j‡g‡qivI e‡ov n‡q †M‡Q!)

GB PgKc` mgxKiYwU Avgv‡`i‡K e‡j †h w¯i Av‡Q Zvi Zjbvq Pjgvb Ab¨ mevi mg‡qi MwZ K‡g Av‡m| †h w¯i Zvi NwowU Pj‡e `"Z Avi †h Pjgvb, Zvi NwowU Pj‡e ax‡i! Awg Rwb GUv wekvm Ki‡Z Kó n‡"Q, wKš GUv‡K wekvm Ki‡Z n‡e, GUv mwZ¨| AmsL¨ cix¶v K‡i GUvi mZ¨Zv cgvY Kiv n‡q‡Q|

wgDl‡bi Avq

gnvKv‡k †_‡K kw³kvjx KmwgK †i hLb evqgÊ‡ji Dc‡i AvNvZ K‡i ZLb †mLv‡b wgDlb bv‡g GK ai‡bi KYv ˆZwi nq| GB KYv¸‡jvi Avq gvÎ 2.2 gvB‡µv‡m‡KÛ| evqgÊ‡ji Dc‡i ˆZwi nIqv wgDlb hw` Av‡jvi †e‡Mi KvQvKwQ MwZ‡e‡MI cw_exi w`‡K Avm‡Z ïi" K‡i Zv n‡j †m Zvi Avq _vKvKvjxb mg‡q Avm‡Z cvi‡e gvÎ:

$$c \times 2.2 \times 10^{-6}\, m = (3\times 10^{8})\,(2.2 \times 10^{-6})\, m = 660m$$

hvi A_ GK wK‡jvwgUvi †_‡KI Kg `iZ hvevi Av‡MB wgDlb¸‡jv Ab¨ wKQ‡Z cwiewZZ n‡q hv‡e| hvi A_ cw_ex‡Z e‡m Avgiv KL‡bvB wgDlb †`L‡Z cve bv| wKš in‡m¨i e¨vcvi n‡jv Avgiv wKš cw_ex‡Z e‡m memg‡qB wgDlb †`L‡Z cvB, mwZ¨ K_v ej‡Z wK hviv cw_ex‡Z e‡m Le m² G·‡cwi‡g›U Ki‡Z Pvq Zviv GB wgDl‡bi hšYvq AwZô n‡q hvq| cPÊ kw³kvjx GB wgDlb Niewo `vjvb-†KvVv KswµU me wKQ †f` K‡i P‡j Av‡m|

AvBb÷vB‡bi †¯úkvj w_lwi Ad wi‡jwUwfwUi Av‡M wgDl‡bi Avq wb‡q GB in‡m¨i †Kv‡bv mgvavb wQj bv, wKš GLb Avgiv †Pv‡Li cj‡K GB in‡m¨i mgvavb Ki‡Z cwi| wgDl‡bi Avq KL‡bvI †e‡o hvq wb–Zvi Avq Avm‡jB gvÎ 2.2 gvB‡µv‡m‡KÛ| †mUv hLb evqgÊ‡ji Ic‡i ˆZwi nq Zvici †m Avm‡jB gvÎ 2.2 gvB‡µv‡m‡KÛ †e‡P _v‡K| kw³kvjx KmwgK †i Gi AvNv‡Z ˆZwi nq e‡j GB wgDlb¸‡jvI nq cPÊ kw³kvjx, Zv‡`i MwZ‡eM n‡"Q cvq 0.9994 $c$, Kv‡RB Avgiv hviv cw_exi gvbl Zviv wgDl‡bi 2.2 gvB‡µv‡m‡KÛ‡K †`Le:

$$\frac{2.2}{\sqrt{1-\left(\frac{0.9994\,c}{c^{2}}\right)^{2}}} = 63.51 \text{ gvB‡µv‡m‡KÛ}$$

A_vr wgDlb Zvi wn‡m‡e mwZ¨B gvÎ 2.2 gvB‡µv‡m‡KÛ †e‡PwQj wKš Avgv‡`i wn‡m‡e †mUv †e‡P _v‡K 63.51 gvB‡µv‡m‡KÛ, cvq wÎk¸Y †ewk mgq! GB wÎk¸Y †ewk mg‡q †mUv wÎk¸Y †ewk `iZ †h‡Z cv‡i–Kv‡RB evqgÊ‡ji Dc‡ii cô †_‡K cw_exi c‡ô †cŠ‡Q hvIqv wgDl‡bi R‡b¨ †Kv‡bv e¨vcviB bv!

1 b¤i ZwjKv

MwZ‡eM	AwZµvš mgq
$10\,km/h$ (nvUv)	2×10^{-14} %
$100\,km/h$ (Mvwo)	2×10^{-12} %
$1000\,km/h$ (†cb)	2×10^{-10} %
$15\,km/s$ (i‡KU)	2×10^{-7} %
$0.1c$	2.0 %
$0.99c$	7.0 ¸Y
$0.999c$	22.0 ¸Y
$0.999999\,c$	700 ¸Y

Avmj Nwoi Avmj mgq

hviv GLbI e¨vcviwU wb‡q A¯¯ †eva Ki‡Q Zv‡`i R‡b¨ ejv hvq †h mg‡qi GB e¨vcviUv mwZ¨Kv‡ii Nwo w`‡qI †g‡c cix¶v Kiv n‡q‡Q| A¨vUwgK KK bv‡g AZ¨š m² GK ai‡bi Nwo Av‡Q †mB ai‡bi GKUv Nwo wb‡q K‡qKRb weÁvbx 1977 mv‡j GKUv †c‡b D‡V wek cwiåg‡Y †ei n‡jb| cw_exUv K‡qK cvK N‡i wb‡P †b‡g G‡m †`L‡jb mwZ¨ mwZ¨ Zv‡`i Nwo‡Z AwZµvš mgq cw_exi AwZµvš mgq †_‡K Kg! GB cix¶wU Zviv

Ki‡Z †c‡iwQ‡jb KviY Zv‡`i NwoUv wQj A¨vUwgK KK–Avgv‡`i mvaviY Nwo‡Z †mUv aiv co‡e bv| mg‡qi GB cv_K¨UK aivi R‡b¨ KZ †e‡M †h‡Z nq Zvi GKUv aviYv †`evi R‡b¨ wewfb †e‡M hvIqvi Kvi‡Y mg‡qi KZUK cv_K¨ nq Zvi GKUv ZwjKv 1 b¤i ZwjKvq †`qv n‡q‡Q| †Zvgv‡`i g‡b Kwi‡q †`qvi R‡b¨ ejv hvq eZgvb cw_ex‡Z gnvKv‡k cvVv‡bvi R‡b¨ GKUv i‡KUUv‡K †m‡K‡Û 10-15 *km/s* †e‡M †h‡Z nq|

^`N¨ ms‡KvPb

mgq ebvg ^`N¨

mg‡qi m¤cmvi‡Yi e¨vcviUv hw` Avgiv mwZ¨B wekvm K‡i _wK Zv n‡j Avgiv GiKg Av‡iv wewPÎ wel‡q †h‡Z cwi| Avgiv Avevi Avgv‡`i wgDl‡bi welqwU‡Z wd‡i hvB| Avgiv †`‡LwQ evqgÊ‡ji Dc‡i ^Zwi nIqv wgDl‡bi Avq gvÎ 2.2 gvB‡µv‡m‡KÛ Ges †mB wgDlb hw` G‡Kev‡i Av‡jvi KvQvKwQ MwZ‡e‡MI hvq Zv n‡j †mB mg‡q wgDl‡bi hvevi K_v gvÎ 660m. wKš Avgiv Rwb †mUv cw_exi cô chš P‡j Av‡m Zvi KviY Avgv‡`i Kv‡Q g‡b nq wgDl‡bi mgq m¤cmviY K‡i †mUv n‡q †M‡Q cvq 63.51 gvB‡µv‡m‡KÛ Ges Av‡jvi KvQvKwQ †e‡M †mUv †h‡Z cv‡i cvq 19*km*, cw_exc‡ô Avmvi R‡b¨ h‡_ó `iZ|

Gev‡i Avgiv †`wL GB e¨vcviUv wgDl‡bi Kv‡Q Kx g‡b nq| wgDl‡bi wb‡Ri Kv‡Q wKš g‡b n‡”Q †h †m 2.2 gvB‡µv‡m‡KÛB †e‡PwQj| Kv‡RB GB 2.2 gvB‡µv‡K‡Û wgDlbwU hw` 19*km* `iZ AwZµg K‡i _v‡K Zv n‡j Zvi †eM n‡”Q:

$$v = \frac{19km}{2.2\mu s} = 9\times10^{9}\, m/s = 30c$$

†hUv Av‡jvi †e‡Mi wÎk¸Y–wKš Avgiv mevB Rwb Av‡jv †_‡K †ewk MwZ‡Z wKQ †h‡Z cv‡i bv! Kv‡RB GB mgm¨Uv Avgv‡`i †gUv‡Z n‡e!

Avgiv hw` mg‡qi kvkZ i¦c †d‡j w`‡q ej‡Z cvwi G‡KK RvqMvi mgq G‡KK iKg–†Kv‡bvUv `“Z †Kv‡bvUv axi Zv n‡j `i‡Zi kvkZ i¦c †i‡L w`‡Z n‡e †K e‡j‡Q? Kv‡RB Avgiv Abgvb KiwQ MwZkxj e¯i mgq‡K †h iKg $\sqrt{1-\frac{v^2}{c^2}}$ w`‡q fvM w`‡q m¤cmviY K‡iwQ wVK †miKg MwZkxj e¯i ^`N¨‡Kl $\sqrt{1-\frac{v^2}{c^2}}$ w`‡q ¸Y K‡i †mUv‡K ms‡KvPb Ki‡Z n‡e Zv n‡jB †Kv‡bv mgm¨v _vK‡e bv! †Kv‡bv GKRb hw` wb‡R‡K w¯i a‡i †bq Zv n‡j Zvi Pvicv‡k hv wKQ bo‡Q Po‡Q ev MwZkxj n‡”Q mewKQ‡Z mgq m¤cmviY n‡Z _v‡K †mB K_vUv †hiKg mwZ¨, †miKg GUvI mwZ¨: †Kv‡bv GKRb hw` wb‡R‡K w¯i a‡i †bq Zv n‡j Zvi Pvicv‡k hv wKQ bo‡Q Po‡Q MwZkxj n‡”Q mewKQi `i‡Zi ms‡KvPb n‡Z _v‡K| mg‡qi m¤cmviY nq $\frac{1}{\sqrt{1-\frac{v^2}{c^2}}}$ w`‡q, hvi gvb memg‡qB 1 †_‡K †ewk| `i‡Zi ms‡KvPb nq $\sqrt{1-\frac{v^2}{c^2}}$ w`‡q, hvi gvb memg‡qB 1 †_‡K Kg, ZvB `iZ GB nv‡i msKwPZ n‡q hvq|

Zv n‡j Avgiv Avevi wgDl‡bi Kv‡Q wd‡i hvB, wgDlb hLb Av‡jvi †e‡Mi KvQvKwQ †e‡M cw_exi w`‡K Q‡U Av‡m ZLb Zv‡KB hw` Avgiv w¯i awi, Zv n‡j †mB wgDl‡bi g‡b n‡e, †m wVKB w¯i, wKš cw_exUvB ewS cvq Av‡jvi †e‡M Zvi Kv‡Q Q‡U Avm‡Q| Kv‡RB evqgÊj †_‡K cw_exi `iZUv msKwPZ n‡q hv‡e $\sqrt{1-\frac{v^2}{c^2}}$ wn‡m‡e, wgDl‡bi Kv‡Q g‡b n‡e GB †QvU `iZUv 2.2 gvB‡µv‡m‡K‡Ûi †fZi †cŠ‡Q †h‡Z †Kv‡bv mgm¨vB †bB|

msKwPZ ^`N¨

`iZ ms‡KvP‡bi welqUv Avgiv GKUv D`vniY †_‡K †ei K‡iwQ| Gev‡i LwU hw³ ZK Ges LwbKUv MwYZ w`‡q †ei Kwi| Avevi wd‡i hvB †Zvgvi Kv‡Q Ges †U‡b e‡m _vKv †Zvgvi eÜi Kv‡Q|

aiv hvK †Zvgiv `R‡bB wVK Ki‡j †Zvgiv †÷k‡bi c¨vUd‡gi ^`N¨Uv gvc‡e| Zwg GKUv ^`N¨ gvcvi wd‡Z w`‡q ^`N¨Uv †g‡c †`L‡j †mUv n‡”Q

L_0, hLb `iZUv gvcv †kl n‡q‡Q ZLb †`L‡j †Zvgvi eÜ †h-†U‡b e‡m Av‡Q †mB †UbwU v †e‡M GwM‡q Avm‡Q| †UbUv †÷k‡b _vgj bv, ZvB †U‡bi BwÄb c¨vUd‡gi GK gv_v †_‡K Ab¨ gv_vq †h‡Z †hUK mgq wb‡q‡Q †mUv †g‡c wb‡j, aiv hvK mgqUv n‡”Q t, Kv‡RB Zwg Le AvZ¥ekv‡mi mv‡_ ej‡Z cvi‡e:

$$L_0 = vt$$

GLb †Zvgvi eÜi Kv‡Q hvIqv hvK| †mI †U‡b e‡m cvUd‡gi `iZUv gvcvi †Póv Ki‡Q, †m Rvbvjv w`‡q gv_v †ei Ki‡j Zvi Kv‡Q g‡b n‡e †m ewS †U‡bi †fZi w¯i n‡q e‡m Av‡Q, †÷kbUvB v †e‡M wcQb w`‡K Q‡U hv‡”Q| †Zvgvi eÜ wbi“rmwnZ nj bv, †m †`Lj KLb c¨vUd‡gi GK gv_v Zvi mvg‡b G‡m‡Q ZLb †_‡K mgqUK gvc‡Z ïi“ K‡i‡Q| hLb c¨vUd‡gi Ab¨ gv_v Zvi mvg‡b G‡m‡Q ZLb †m mgq gvcv †kl Kij Ges †`Lj mgqUK n‡”Q $t_0$ Kv‡RB †m ejj, c¨vUd‡gi `iZ

$$L = vt_0$$

GLv‡b GKUv wRwbm j¶¨ K‡iv, Zwg hLb ^`N¨ gvcvi wdZv w`‡q c¨vUd‡gi ^`N¨ †g‡cQ Avgiv †mUv‡K e‡jwQ $L_0$, wKš †Zvgvi eÜ hLb †g‡c‡Q †mUv‡K $L_0$ ewjwb, e‡jwQ $L$, KviY w_lwi Ad wi‡jwUwfwU Ki‡Z Ki‡Z Avgiv mZK n‡q †MwQ! Avgiv Rwb `wU `iZ wfb n‡Z cv‡i Kv‡RB `‡Uvi Rb¨ Avjv`v Avjv`v bvg †`qv fvj| Gev‡i Avgiv GKUv `iZ‡K Ab¨ `iZ w`‡q fvM w`B:

$$\frac{L}{L_0} = \frac{vt_0}{vt} = \frac{t_0}{t}$$

Kv‡RB $L = L_0\left(\frac{t_0}{t}\right)$

Avgiv Rwb $t = \frac{t_0}{\sqrt{1-\frac{v^2}{c^2}}}$ mZivs $\frac{t_0}{t} = \sqrt{1-\frac{v^2}{c^2}}$

Kv‡RB $L = L_0\sqrt{1-\frac{v^2}{c^2}}$

GUv n‡"Q ``N¨ ms‡KvP‡bi weL¨vZ mÎ| mevB‡K Avevi g‡b Kwi‡q †`qv hvK, Avgv‡`i mv‡c‡¶ w¯i `wo‡q Av‡Q †miKg †Kv‡bwKQi ``N¨ hw` Avgiv gwc Zv n‡j †mUv n‡"Q $L_0$, Avgv‡`i mv‡c‡¶ MwZkxj †Kv‡bwKQi %`N¨ n‡"Q $L$ Ges GB `‡Uvi m¤úKUv †`qv n‡q‡Q ``N¨ ms‡KvP‡bi GB weL¨vZ mÎwU w`‡q|

Avgiv Avgv‡`i ``bw›`b Rxe‡b ``N¨ ms‡KvP‡bi welqUv †`L‡Z cvB bv KviY Av‡jvi †eM A‡bK †ewk Ges Av‡jvi †e‡Mi KvQvKwQ bv hvIqv chš ``N¨ ms‡KvPbUv †Pv‡L c‡o bv| 2 b¤i †Uwe‡j MwZ‡eM KZ n‡j ``N¨ KZUK msKwPZ n‡e Zvi GKUv aviYv †`qv n‡q‡Q|

2 b¤i ZwjKv

MwZ‡eM	``‡N¨i ms‡KvPb
$10\,km/h$ (nvUv)	$2\times10^{-14}\,\%$
$100\,km/h$ (Mwo)	$2\times10^{-12}\,\%$
$1000\,km/h$ (†cb)	$2\times10^{-10}\,\%$
$15\,km/s$ (i‡KU)	$2\times10^{-7}\,\%$
$0.1c$	$2.0\,\%$
$0.99c$	7.0 ¸Y
$0.999c$	22.0 ¸Y
$0.999999\,c$	700 ¸Y

Av‡jvi †eM hw` Le Kg n‡Zv- NÈvq wZwik wK‡jwgUvi Zvn‡j Avgiv AevK n‡q †`LZvg Pvicv‡k MwZkxj mewKQ P¨vcUv n‡q hv‡"Q! Mwo P¨vcUv n‡q hv‡"Q, evm, UvK wP‡o P¨vcUv n‡q hv‡"Q| Z‡e GLv‡b wKš GKUv wRwbm j¶ ivL‡Z n‡e–MwZkxj GKUv e¯ msKwPZ nq Zvi MwZi w`‡K| A_vr †hUv mvg‡b wKsev wcQ‡b hv‡"Q †mUv msKwPZ nq mvg‡b wcQ‡b, Zvi D"PZvi †Kv‡bv cwieZb nq bv| †hUv Dc‡i wb‡P hv‡"Q Zvi D"PZv msKwPZ nq wKš mvg‡b wcQ‡b †Kv‡bv cwieZb nq bv!

j‡i›U‡Ri i¦cvši

M¨vwjwjqvb i¦cvši

†¯úkvj w_lwi Ad wi‡jwUwfwU Kivi mgq Avgiv wKš D‡ëv w`K †_‡K G‡mwQ †mUv nq‡Zv †KD †Ui cvq wb| c`v_weÁv‡bi eB‡q hLb †KD †¯úkvj wi‡jwUwfwU c‡o ZLb j‡i›UR i¦cvšiUv Av‡M c‡o, mg‡qi cmviY wKsev ``‡N¨i ms‡KvPb †m¸‡jv GLvb †_‡KB †ei Kiv hvq| Avgiv GKUv kU KvU K‡i †d‡jwQ– j‡i›UR i¦cvši bv wk‡LB mg‡qi cmviY Avi %`‡N¨i ms‡KvPb wk‡L †djwQ! Zv‡Z †Kvb ¶wZ nq wb, wKš Avgvi g‡b nq †¯úkvj wi‡jwUwfwU c‡ivUK †kLvi R‡b¨ j‡i›UR i¦cvšiUvI Rvbv `iKvi|

GUv †evSvi R‡b¨ Avevi †Zvgv‡K Avi †U‡b e‡m _vKv †Zvgvi eÜ‡K `iKvi n‡e| Z‡e Gevi Kíbv K‡i wbB Zwg c¨vUdg †_‡K wÎk wK‡jwgUvi `‡i `wo‡q AvQ| †Zvgiv eÜ †U‡b K‡i Avm‡Q, †U‡bi MwZ NÈvq IvU wK‡jwgUvi, hvi A_ cwZ wgwb‡U †UbUv †÷k‡bi w`‡K GK wK‡jwgUvi K‡i GwM‡q hv‡"Q|

Avgiv Av‡iv GKUv welq Kíbv K‡i wbB–hw`I Avgiv †¯úkvj wi‡jwUwfwUi A‡bK wKQ wk‡LwQ, wKš Kíbv K‡i wbB Avgiv Zvi wKQB Rwb bv!

†UbUv GwM‡q Avm‡Z Avm‡Z GKUv mgq Avmj hLb †ijjvB‡bi cv‡k `wo‡q _vKv Zwg Ges †U‡b e‡m _vKv †Zvgvi eÜ †÷kb †_‡K mgvb `i‡Z| wVK †mB gn‡Z †KD hw` †Zvgv‡K wR‡Ám K‡i, Ò†÷kbUv KZ

`i?Ó Zwg ej‡e ÒwÎk wK‡jwgUviÓ, †Zvgvi eÜ ej‡e ÒwÎk wK‡jwgUvi|Ó †UbUv GwM‡q hv‡"Q Kv‡RB cvPwgwbU ci †KD hw` †Zvgv‡`i wR‡Ám K‡i, Ò†÷kbUv KZ `i?Ó Zv n‡j Zwg Avevi I ej‡e, ÒwÎk wK‡jwgUviÓ, wKš †Zvgvq eÜ ej‡e, ÒcwPk wK‡jwgUvi!Ó Gfv‡e `k wgwbU ci hw` wR‡Ám Kiv nq, Zwg Avevi I ej‡e, Ò†÷kbUv wÎk wK‡jwgUvi `‡iÓ, wKš †Zvgvi eÜ ej‡e, Òwek wK‡jwgUvi!Ó Zvi KviY hZB mgq hv‡"Q ZZB †Zvgvi eÜ Ges †÷k‡bi gv‡S `iZUK K‡g hv‡"Q| GLb Avgiv ej‡Z cwi †h Zwg Ges †Zvgvi eÜ `R‡bB `iZ gvcvi †Póv KiQ| †Zvgvi gvcv `iZUK hw` nq x Avi †Zvgvi eÜi gvcv `iZ hw` nq x' Zv n‡j ejv hvq:

$$x' = x - vt$$

GB mÎ †_‡K ¯úó †`Lv hv‡"Q †Zvgvi eÜ hLb `iZUv gvc‡Q mg‡qi mv‡_ mv‡_ †mUv K‡g hv‡"Q|

GLv‡b Avm‡j Avgiv `‡Uv †idv‡iÝ †dg Kíbv K‡iwQ–GKUv w¯i †idv‡iÝ †dg ev †Zvgvi †idv‡iÝ †dg, Av‡iKUv †Zvgvi eÜi †idv‡iÝ †dg ev Pjgvb †idv‡iÝ †dg| †Zvgvi †idv‡iÝ †dg †_‡K †Kv‡bv `iZ gvcv n‡j †mUv‡K ejv nq x, †Zvgvi eÜi Pjgvb †idv‡iÝ †dg †_‡K †Kv‡bv `iZ gvcv n‡j †mUv‡K ejv nq $x'$| Avgv‡`i ^`w»`b Rxe‡b †ij jvB‡bi cv‡k `wo‡q _vKv †Zvgiv wKsev †U‡bi †fZ‡i e‡m _vKv eÜi Nwoi mg‡q †Kv‡bv cv_K¨ †`Lv hv‡e bv Zel Avgiv ewj, Zwg hLb mgq gvc †mUv n‡"Q t Ges †Zvgvi eÜ hLb gv‡c †mUv n‡"Q t' Ges †h‡nZ `‡Uvi gv‡S †Kv‡bv cv_K¨ †bB Kv‡RB $t = t'$ (Avgiv Rwb w_lwi Ad wi‡jwUwfwU e‡j‡Q cv_K¨ Av‡Q - wKš GLb Avgiv fvb KiwQ †mUv Avgiv Rwb bv!)

c‡iv e¨vcviUv ¸wQ‡q Avgiv ej‡Z cwi: Zwg †h `iZ Avi mgq gvcQ †mUv n‡"Q $x$ Ges $t$ Ges †Zvgvi eÜ $v$ †e‡M Pjš †U‡b e‡m †_‡K †h `iZ Avi mgq gvc‡Q †mUv n‡"Q x' Ges t' | GLb Avgv‡`i‡K hw` ejv nq Pjš †U‡b e‡m _vKv Ae¯vq gvcv `iZ ($x'$) Avi mgq ($t'$)-†K w¯i _vKv Ae¯vq gvcv `iZ (x) Avi mgq (t) w`‡q cKvk Ki‡Z Zv n‡j Avgiv wjLe:

$$x' = x - vt$$
$$t' = t$$

GLb D‡ëvUvI Ki‡Z cwi, Avgiv w¯i Ae¯vq gvcv `iZ ($x$) Avi mgq ($t$) Pjš †U‡b e‡m gvcv `iZ (x') Ges mgq (t') w`‡q cKvk Ki‡Z cwi| †mUv n‡e:

$$x = x' + vt'$$
$$t = t'$$

mgxKiY `‡Uv †h mwZ¨ Zv‡Z †Kv‡bv m‡›`n †bB, KviY NÈvq IvU wK‡jwgUvi †e‡M †M‡j wÎk wgwbU c‡i †UbUv †÷k‡b †c‡Q hv‡e, hvi A_ hLb $t' = 30$ wgwbU ZLb $x' = 0$| ZLb wgwb‡U GK wK‡jwgUvi wn‡m‡e wÎk wgwb‡U $vt' = 30\ km$ Kv‡RB $x = 30\ km$ Avgiv †hUv Av‡M †_‡K Rwb| (30 wgwbU mgqUK †U‡b Ges evB‡i ` RvqMv‡ZB mgvb, †Kv‡bv cv_K¨ †bB|)

w¯i Ges Pjgvb †idv‡iÝ †d‡gi GB m¤úK¸‡jv‡K e‡j M¨wjwjqvb i{cvši|

M¨wjwjqvb i{cvš‡ii mgm¨v

weÁvbx M¨v‡jwjli mgq †KD †¯úkvj w_lwi Ad wi‡jwUwfwUi K_v RvbZ bv Kv‡RB GB m¤úK¸‡jv‡KB mevB mwZ¨ e‡j RvbZ| MwZ‡eM Av‡jvi KvQvKvwQ n‡j c‡iB mgm¨v¸‡jv †Pv‡L c‡o| MwZ‡eM hw` Kg nq Zv n‡j GB M¨v‡jwjqvb cwieZbUK †gvUvgwU mwVKfv‡eB `iZ Avi mgq‡K e¨vL¨v K‡i| MwZ‡eM hw` †e‡o hvq Zv n‡j †mUv Avi mwVKfv‡e e¨vL¨v Ki‡Z cv‡i bv| †hgb:

$$x = x' + vt'$$

†h‡nZ $t = t'$ ZvB evg w`‡K t w`‡q fvM w`B Wvb w`‡K t' w`‡q fvM w`B

$$\frac{x}{t} = \frac{x'}{t'} - + v$$

AwZµvš `iZ ($x$) †K mgq ($t$) w`‡q fvM w`‡j †eM cvIqv hvq ZvB $\frac{x}{t} = V$ Ges $\frac{x'}{t'} = v'$ wjL‡j $V = v' + v$

GLb hw` $v' = \frac{3}{4}c$ Ges $v = \frac{3}{4}c$ nq

(A_vr †Ub hv‡"Q Av‡jvi wZb-PZ_vsk †e‡M (v) †mB †U‡b †Zvgvi eÜ †`Šov‡"Q Av‡jvi wZb-PZ_vsk ($v'$) †e‡M Ges Zwg wb‡P `wo‡q †Zvgvi mv‡c‡¶ †Zvgvi eÜ KZ †e‡M †`Šov‡"Q (V) †mUv †ei Kivi †Póv KiQ!)

Zvn‡j Avgiv †`Le $V = 1.5c$, A_vr †Zvgvi eÜ Av‡jvi †`o¸Y †ewk MwZ‡Z †`Šov‡"Q| wKš Avgiv Rwb †¯úkvj w_lwi Ad wi‡jwUwfwU Abhvqx †mUv m¤e bq| Kv‡RB M¨v‡jwjqvb cwieZb Avm‡j mwVK bq, Kg †e‡Mi †ejvq †mUv w`‡q KvR Pvjv‡bv hvq wKš mKj †e‡Mi Rb¨ KvR K‡i GiKg Ab¨ GKUv m¤úK `iKvi| w¯i Ges Pjš †idv‡iÝ †d‡gi `iZ Avi mg‡qi †fZiKvi GB m¤ú‡Ki bvgUvB n‡"Q j‡i›U‡Ri i¦cvši| hw`I c‡iv e¨vcviUvB G‡m‡Q AvBb÷vB‡bi w_lwi Ad wi‡jwUwfwUi Kvi‡Y wKš Gi bvg AvBb÷vB‡bi i¦cvši bq, j‡i›U‡Ri i¦cvši I Zvi KviYUvI GKU c‡iB Avgiv †`Le|

j‡i›UR-Gi i¦cvši

j‡i›UR-Gi i¦cvš‡ii mÎUv Kx n‡e Avgiv GLbI Rwb bv, Z‡e GUK ej‡Z cwi †h †mUv hv-B †nvK Avgv‡`i ``bw›`b Rxe‡bi †h-†eM †mB †e‡Mi R‡b¨ GUv M¨v‡jwjqvb cwieZ‡bi g‡Zv n‡q †h‡Z n‡e| M¨vwjwjqvb i¦cvš‡ii c_gmÎUv wQj:

$$x' = x - vt$$

a‡i wbB j‡i›U‡Ri i¦cvši n‡"Q

$$x' = k(x - vt)$$

MwZ †eM hLb Kg ZLb $k = 1$ Gi KvQvKwQ n‡q hv‡e| hviv GZ¶Y w_lwi Ad wi‡jwUwfwU gb w`‡q c‡o G‡mQ Zviv wbðqB Abgvb K‡i †d‡jQ $k$ Uv Kx n‡Z cv‡i wKš Avgiv †mUv Av‡M e‡j †dje bv| LwU weÁvbxi g‡Zv hw³ZK w`‡q AMmi n‡q †mUv †ei Kie!

AvBb÷vB‡bi †¯úkvj w_lwi Ad wi‡jwUwfwUi c_g mÎ e‡j mKj Bbviwkqvj †idv‡iÝ †d‡g c`v_weÁv‡bi mÎ GKB n‡Z n‡e| Zv n‡j Avgiv ej‡Z cwi w¯i †idv‡iÝ †d‡g Pjgvb †idv‡iÝ †dg‡K (†hgb †Ub) hw` g‡b nq mvg‡bi w`‡K $v$ †e‡M hv‡"Q Zv n‡j Pjgvb †idv‡iÝ †dg †_‡K w¯i †idv‡iÝ †dg‡K g‡b n‡e †mUv $v$ †eM wcQ‡bi w`‡K A_vr †mUv $-v$ †e‡M hv‡"Q| Kv‡RB c`v_weÁv‡bi mÎ hw` ûeû GKB _v‡K Zvn‡j x

Ges t w`‡q Avgiv †hiKg $x'$ †K wj‡LwQ wVK †miKg $x'$ Avi $t'$ w`‡q x †K wjL‡Z cvie, Z‡e †mLv‡b v-Gi RvqMvq wjL‡Z n‡e – v A_vr

$$x = k(x' + vt')$$

†Lqvj K‡iv `B RvqMv‡ZB wKš GKB $k$ e¨envi Kiv n‡q‡Q, c`v_weÁv‡bi mÎ `RvqMv‡ZB GK, Kv‡RB k UvI GK n‡Z n‡e, Ab¨ wKQ n‡Z cvi‡e bv| GUv wKš Le ¸i"ZcY GKUv e¨vcvi|

Gev‡i Avgiv wKQ A¨vj‡Reiv Kwi, †gv‡UI KwVb A¨vj‡Reiv bq Z‡e GKU ˆah a‡i Ki‡Z n‡e| B‡"Q Ki‡jB Avgiv DËiUv wj‡L w`‡Z cwi wKš Avgiv †mUv Kie bv| w_lwi Ad wi‡jwUwfwUi g‡Zv c`v_weÁv‡bi GZ PgKc` e¨vcvi hw` cwZwU jvBb e‡S e‡S bv Kwi Zv n‡j Avb›`Uv †Kv_vq? ïi" Kiv hvK AvBb÷vB‡bi wØZxq mÎ w`‡q, A_vr Av‡jvi †eM `wU †idv‡iÝ †d‡gB mgvb Kv‡RB hw` `wU †idv‡iÝ †d‡gB GKUv Av‡jvKiwk‡K GKUv mgq chš †h‡Z †`qv nq Zvn‡j †mUv LwbKUv GKUv `iZ AwZµg Ki‡e| GKRb ej‡e †mUv n‡"Q

$$x = ct$$

Ab¨Rb ej‡e †mUv n‡"Q

$$x' = ct'$$

Ges `R‡bB mwVK| wØZxq mgxKiYwU †_‡K $x'$ Ges $t'$ mwi‡q ïa $x$ Ges $t$ †Z wb‡q Avmv hvK| evg w`‡Ki AskwU mnR| Avgiv wjLe $x' = k(x - vt)$ Wvbw`‡Ki R‡b¨ GKU A¨vj‡Reiv Ki‡Z n‡e| ïi" Kiv hvK| Avgiv Gi gv‡S e‡jwQ

$$x = k(x' + vt')$$

Kv‡RB $$\frac{x}{k} = x' + vt'$$

A_vr $$vt' = \frac{x}{k} - x'$$

wKsev $$t' = \frac{x}{kv} - \frac{x'}{v}$$

GLb Avgiv x′-Gi RvqMvq wjL‡Z cwi $x' = x - vt$

mZivs $$t' = \frac{x}{kv} - \frac{k(x - vt)}{v}$$

Gev‡i Wvb w`‡Ki AskUv GKU ¸wQ‡q †jLv hvK †hLv‡b $t$ Avi $x$ ¸‡jv Avjv`v Avjv`v _v‡K

A_vr: $$t' = \frac{x}{kv} - \frac{kx}{v} + \frac{kvt}{v}$$

wKsev $$t' = kt + \frac{x}{kv}(1-k^2)$$

†kl chš Avgiv t' Gi R‡b¨ GKUv wKQ †c‡qwQ †hUv †jLv n‡q‡Q x Ges t w`‡q|

Gev‡i $x' = ct'$ Gi evg w`‡K Ges Wvb w`‡K h_vh_ iwk¸‡jv emv‡bv hvK:

$$k(x-vt) = c(kt + \frac{x}{kv}(1-k^2))$$

GB mgxKiY †_‡K GLb †ei Kiv hvK x mgvb KZ|

A_vr, $$kx - kvt = ckt + \frac{cx}{kv}(1-k^2)$$

wKsev $$kx - \frac{cx}{kv}(1-k^2) = ckt + kvt$$

wKsev $$x(k - \frac{c}{kv}(1-k^2)) = kt(c+v)$$

wKsev $$x = \frac{k(c+v)}{k - \frac{c(1-k^2)}{kv}}t$$

wKš Avgiv Rwb $$x = ct$$

Kv‡RB wbðqB $$\frac{k(c+v)}{k - \frac{c(1-k^2)}{kv}} = c$$

Avi GKULwb A¨vj‡Reiv ewK Av‡Q:

$$k(c+v) = kc - \frac{c^2}{kv}(1-k^2)$$

$$kc + kv = kc - \frac{c^2}{kv} + \frac{c^2k}{v}$$

`B cvk †_‡K kc mwi‡q wbB

$$kv = -\frac{c^2}{kv} + \frac{c^2k}{v}$$

`Bcv‡kB $kv$ w`‡q ¸Y †`qv hvK

$$k^2v^2 = -c^2 + c^2k^2$$

GLvb †_‡K Le mnR GKUv mÎ †c‡qwQ k^2-Gi R‡b¨:

$$k^2(c^2 - v^2) = c^2$$

`B cv‡kB $c^2$ w`‡q fvM w`B

$$k^2(1 - \frac{v^2}{c^2}) = 1$$

A_vr $$k = \frac{1}{\sqrt{1 - \frac{v^2}{c^2}}}$$

wVK Avgiv ïi“‡Z †hUv Abgvb K‡iwQjvg! Z‡e Avgiv wKš Abgvb K‡i ewm‡q w`B wb- ixwZg‡Zv A¼ K‡I †ei K‡iwQ| GLb Avgiv Zvn‡j j‡i›U‡Ri i¦cvši wjL‡Z cvwi:

$$x' = \frac{x - vt}{\sqrt{1 - \frac{v^2}{c^2}}}$$

Avgiv t'-Gi Rb¨ wKQ wjwL wb, Gev‡i †mUvI †jLv hvK| †h‡nZ $x' = ct'$

Kv‡RB
$$t' = \frac{x'}{c} = \frac{\frac{x}{c} - \frac{vt}{c}}{\sqrt{1-\frac{v^2}{c^2}}}$$

wKš Avgiv Rwb $x = ct$ Kv‡RB mÎUv‡K GKU ¸wQ‡q †jLv hvK| c_g As‡k ivL‡Z PvB t wØZxq As‡k ivL‡Z PvB x

A_vr,
$$t' = \frac{t - \frac{xv}{c^2}}{\sqrt{1-\frac{v^2}{c^2}}}$$

x Ges t w`‡q x' Ges t' cKvk Kivi GB mÎUv‡K ejv nq j‡i›U‡Ri i¦cvši|

†Kb AvBb÷vB‡bi i¦cvši bq

AvBb÷vB‡bi w_lwi Ad wi‡jwUwfwUi mÎ `wU e¨envi K‡i GB i¦cvšiwU †ei Kiv n‡q‡Q, Zel GB i¦cvši‡K AvBb÷vB‡bi i¦cvši bv e‡j j‡i›U‡Ri i¦cvši ejv nq Zvi GKUv KviY Av‡Q| we`¨r-†PŠ¤Kxq †h-mÎ¸‡jv Av‡Q †m¸‡jv GKUv †idv‡iÝ †dg †_‡K Ab¨ †idv‡iÝ †d‡g i¦cvši Ki‡j †m¸‡jv KvR Ki‡Zv bv| ZLb weÁvbx j‡i›UR A‡bK †L‡UL‡U wKQ i¦cvši †ei Ki‡jb †hUv e¨envi Ki‡j we`¨r †PŠ¤Kxq mÎ¸‡jv mwVK fv‡e KvR KiZ| weÁvbx j‡i›U‡Ri †mB i¦cvši¸‡jvB Avgiv GBgvÎ †ei K‡iwQ| weÁvbx j‡i›UR GB i¦cvši ¸‡jv c_g †ei K‡iwQ‡jb mwZ¨ wKš wZwb NYv¶‡il m‡›`n K‡ib wb †h G¸‡jv Avm‡j GKUv hMvš Kvix e¨vcvi Bw½Z w`‡"Q, †hLv‡b mgq Ges `iZ m¤úY bZbfv‡e cKvk n‡Z hv‡"Q| Zvi Kv‡Q GB i¦cvši wQj †bnv‡qZB †Rvi K‡i ewm‡q †`qv wKQ wbqg| AvBb÷vB‡bi †¯úkvj w_lwi Ad wi‡jwUwfwU w`‡q hLb G¸‡jv Avevi bZb K‡i Kiv n‡q‡Q ZLb Gi mwZ¨Kvi ¸i"ZUK c_gevi mevB †mwU eS‡Z †c‡iQ!

hw`I weÁvbx j‡i›UR GB i¦cvš‡ii mÎ¸wji mwZ¨Kv‡ii ¸i"ZUK ai‡Z cv‡ib wb ZeI †h‡nZ wZwbB c_‡g GB mÎ¸wj †ei K‡iwQ‡jb †mR‡b¨ Zvi cwZ m¤§vb †`wL‡q GB i¦cvš‡ii mÎ¸‡jv‡K ejv nq j‡i›U‡Ri i¦cvši|

†¯úm UvBg

Avgiv i¦cvši¸‡jv †`‡L †d‡jwQ ZeI Avevi GKevi GKmv‡_ †jLv hvK †hb †Zvgiv mevB Gi w`‡K `xN mgq ZwK‡q _vK‡Z cv‡iv, KviY wekRM‡Zi c‡iv KvVv‡gvUvB GB mÎ¸‡jv cwieZb K‡i †d‡jwQj|

$$x' = \frac{x\text{-}vt}{\sqrt{1-\frac{v^2}{c^2}}}$$

$$t' = \frac{t - \frac{xv}{c^2}}{\sqrt{1-\frac{v^2}{c^2}}}$$

GLv‡b x', t' Kx Ges x, t Kx †mUv Av‡MB e‡j †`qv n‡q‡Q| welqUv †h‡nZ ¸i"ZcY Avgiv Avevi GKUv D`vniY w`‡q c‡ivUv bZb K‡i AvilGKevi SvjvB K‡i wbB|

aiv hvK Zwg GKUv †ijjvB‡bi cv‡k `wo‡q AvQ, aiv hvK mgqUv ivZ Ges AÜKvi| Ges wVK ZLb †Zvgvi cvk w`‡q GKUv †Ub hv‡"Q v †e‡M| †mB †U‡b †Zvgvi eÜ e‡mwQj| †Zvgvi eÜ wVK hLb †Zvgv‡K AwZµg K‡i †mB mg‡q †Zvgv‡`i `R‡bi Nwo‡ZB †`Lv‡"Q mg‡qi gvb kb¨| ïa ZvB bq †Zvgiv wVK Ki‡j mg‡qi gvb hLb kb¨ ZLb †Zvgiv †h †h Ae¯v‡b wQ‡j †mLvbKvi `i‡ZI gvbI kb¨| A_¨vr hw` †Kv‡bv `iZ gvc‡Z nq Zvn‡j †mB Ae¯v‡bi mv‡c‡¶ `iZUv gvc‡Z n‡e| nVvr K‡i Zwg †`L‡j GKUv †RvbwK †cvKv GKevi R‡j D‡V Avevi wb‡f †Mj| ZLb Awg hw` †Zvgv‡K wR‡Ám Kwi, Ò†RvbwK †cvKvUv †Kv_vq?Ó DË‡i Zwg hw` ej GUv Avgvi KvQ †_‡K x `i‡Z AvQ Zv n‡j wKš DËiUv m¤úY n‡e bv

KviY nq‡Zv †RvbwK †cvKvUv Do‡Q, GKU c‡iB †mUv Avi x `i‡Z bvI _vK‡Z cv‡i| Kv‡RB c‡ivcwi DËi w`‡Z n‡j †Zvgv‡K ej‡Z n‡e t mg‡q GUv x `i‡Z Av‡Q| hvi A_ mg‡qi cwieZb n‡j Gi `i‡Zi cwieZb n‡ZB cv‡i wKš hLb Nwo‡Z †`wL‡q‡Q mgqUv $t$ ZLb †RvbwK †cvKvUv wQj $x$ `i‡Z|

Zwg hLb †RvbwK †cvKvi Ae¯vb Ges Nwo‡Z mgq gvcQ ZLb Zwg k³ gwUi Ici `wo‡q wQ‡j| †Zvgvi Rvbvg‡Z Zwg w¯i| Zwg Rvb †Zvgvi eÜ †U‡b e‡m Av‡Q Ges GB †UbUv hv‡"Q $v$ †e‡M| †Zvgvi eÜi Kv‡Q Aewk¨ g‡b n‡e †m w¯i, †ij jvBb Ges Av‡k cv‡ki me wKQ $-v$ †e‡M Q‡U hv‡"Q! aiv hvK †Zvgvi eÜ GB Pjš †U‡b e‡m †mB GKB †RvbwK †cvKvi `iZ Avi mgqUK gvc‡Q| Pjš †U‡b wQj e‡j Zvi gvcv `iZ Avi Zvi Nwo‡Z mgq `‡UvB wfb n‡e, GB `iZ Avi mgqUv‡K †evSv‡bv n‡q‡Q $x'$Ges $t'$ w`‡q| j‡i›U‡Ri i¦cvš‡ii mÎ †_‡K Avgiv x Avi t Gi mv‡_ x' Avi t'Gi Kx m¤úK †mUv †ei Kiv wk‡L †MwQ| mÎ¸‡jvi w`‡K ZwK‡q †`L‡j Zwg wbðqB †`LQ †U‡b e‡m †Zvgvq eÜ †h `iZ †ei K‡i‡Q †mUv ïagvÎ †Zvgvi gvcv `i‡ZI Dci wbfi K‡i bv, †Zvgvi gvcv mg‡qi Dc‡iI wbfi K‡i| wVK †miKg †Zvgvi eÜ †h mgq †ei K‡i‡Q †mUv ïa †Zvgvi gvcv mg‡qi Dci wbfi K‡i bv, †Zvgvi gvcv `i‡Zi Dc‡iI wbfi K‡i| j‡i›U‡Ri i¦cvši †_‡K Avgiv c_gevi AvP Ki‡Z cwi `iZ Avi mgq Avm‡j Avjv`v Avjv`v wKQ bq - Zviv Le Nwbó m¤úKh³| GLvb †_‡KB †¯úm UvBg K_vUvi Rb¥ n‡q‡Q!

wecixZ j‡i›U‡Ri i¦cvši

Gev‡i Avgiv GKU KU ZK Kwi| †Zvgvi †h eÜ †U‡b hv‡"Q †m hw` nVvr K‡i †NvlYv †`q †h - †m Avm‡j w¯i| †UbUvI w¯i `wo‡q Av‡Q, †UbjvBb gvVNvU cvši mewKQ wcQb w`‡K v †e‡M QU‡Q| Kv‡RB †m †RvbwK †cvKvi Av‡jv Rjvi gn‡Ë hLb Zvi `iZ Avi mgq $x'$ Ges $t'$ †g‡cwQj †mUv n‡"Q w¯i Ae¯v‡b `wo‡q _vKv Ae¯vq gvcv `iZ Avi mgq| D‡ëv Zwg †h †UbjvB‡bi cv‡k `wo‡q `iZ Avi mgq †g‡c‡Qv ($x$ Ges $t$) †mUvB n‡"Q D‡ëv w`‡K Pjgvb _vKv (x' Ges t') $-v$ †e‡M gvcv `iZ Avi mgq| Zv n‡j Kx n‡e? j‡i›U‡Ri i¦cvš‡ii Zv‡Z wKš we›`gvÎ mgm¨v †bB|

Avgiv ûeû †mB GKB mÎ †jLe, ïa x Ges t RvqMvq †jLe x' Ges t', x' Ges t' Gi RvqMvq †jLe x Ges t Ges v Gi RvqMvq ewm‡q †`e $-v$, A_vr:

$$x = \frac{x' - (-v)t'}{\sqrt{1-\frac{v^2}{c^2}}} = \frac{x' + vt'}{\sqrt{1-\frac{v^2}{c^2}}}$$

$$t = \frac{t' - \frac{x(-v')}{c^2}}{\sqrt{1-\frac{v^2}{c^2}}} = \frac{t' + \frac{x'v}{c^2}}{\sqrt{1-\frac{v^2}{c^2}}}$$

g‡b ivL‡Z n‡e †Zvgvi eÜ †RvivRwi K‡i‡Q e‡j GLv‡b x', t' n‡"Q w¯i †idv‡iÝ †dg Ges x, t n‡"Q -v ‡e‡M Pjgvb †dg| g‡b †i‡Lv j‡i›UR i¦cvš‡ii GB mgxKiY hLb Gfv‡e †jLv nq ZLb evg cv‡k _v‡K Pjgvb †idv‡i‡Ýi †Kv AwW‡bU, Wvb cv‡k w¯i †idv‡iÝ †d‡gi †Kv AwW‡bU|

j‡i›U‡Ri i¦cvš‡ii e¨envi

^`N¨ ms‡KvPb : Avevi

Avgiv Av‡MB GKevi †`wL‡qwQ †h AvBb÷vB‡bi w_lwi Ad wi‡jwUwfwU †_‡K ^`‡N¨i ms‡KvPb nq| †KD †hb g‡b bv K‡i †h GUv GKai‡bi weåvwš, Avm‡j wKQ msKwPZ n‡"Q bv–ïa Avgv‡`i Kv‡Q ^`N¨ msKwPZ n‡"Q e‡j g‡b n‡"Q, A_vr GwU Avm‡jB nq, mwZ¨ mwZ¨B ms‡KvPb N‡U hvq! Avgiv Av‡MB †`‡LwQ †h w¯i Ae¯v‡bi Zjbvq hv wKQ bo‡Q ZviB ^`‡N¨i ms‡KvPb n‡"Q! Avgiv hw` Avevi †Zvgvi Ges †U‡b e‡m _vKv †Zvgvi eÜi D`vniY wbB Zv n‡j †`Le †h †Zvgvi Kv‡Q g‡b n‡e †UbUv msKwPZ n‡q †M‡Q KviY Zwg w¯i Ges †Zvgvi Zjbvq †UbUv MwZkxj| Avevi †Zvgvi eÜi Kv‡Q g‡b n‡e Zwg (Ges †Zvgvi mv‡_ mv‡_ †Ub †÷kb, Av‡kcv‡k _vKv MvQcvjv b`x avb‡¶Z mewKQ) msKwPZ n‡q †M‡Q KviY Zvi Kv‡Q †m w¯i Ges Zwg Ges †Zvgvi Pvicv‡ki mewKQ MwZkxj! g‡b ivL‡Z n‡e ms‡KvPbUv n‡e †hw`‡K MwZkxj †mw`‡K Ab¨ †Kv‡bv w`‡K wKš †Kv‡bv ms‡KvPb nq bv, †Kv‡bv cwieZb nq bv| †KD hw` ck K‡i, Avm‡j †KvbUv mwZ¨? †UbUv msKwPZ n‡"Q, bwK Zwg msKwPZ n‡"Qv? DËi n‡"Q `‡Uv DËiB mwZ¨| †Zvgvi Kv‡Q †U‡bi ms‡KvPb †hiKg mwZ¨ wVK †m iKg †U‡b e‡m _vKv †Zvgvi eÜi Kv‡Q †Zvgvi ms‡KvPbUvI †miKg mwZ¨| GKUv †ewk mwZ¨ Ab¨Uv Kg mwZ¨ †miKg wKQ bq!

hvB †nvK Avgiv ^`‡N¨i ms‡KvPbUv †ei K‡iwQjvg mg‡qi cmviY e¨envi K‡i| Gev‡i †mUv †ei Kwi j‡i›U‡Ri i¦cvš‡ii mÎ¸‡jv w`‡q|

Avgiv GZevi GB mÎ¸‡jvi K_v e‡jwQ Ges wj‡LwQ †h GZ¶‡Y †mUv bv PvB‡ZB wbðqB mevi gL¯ n‡q †M‡Q! †U‡bi D`vniYUv Av‡M †h‡nZ A‡bKevi †bqv n‡q‡Q †mUvB Zv n‡j Avevi †bqv hvK| KíbvB hLb KiwQ ZLb fvj K‡iB Kíbv Kwi, a‡i †bB †UbUv AmvaviY GKUv †Ub–†hUv Av‡jvq †e‡Mi KvQvKwQ †e‡M †h‡Z cv‡i| aiv hvK Zwg †ijjvB‡bi cv‡k `wo‡q †UbUvi ^`N¨ gvc‡Z PvBQ|

†Kv‡bv wRwb‡mi ^`N¨ gvcv †gvUvgwU mnR, wRwbmwUi GK gv_vi `iZUK gvc‡Z nq Zvici Ab¨ gv_vq `iZUK gvc‡Z nq| mvg‡bi `iZ †_‡K wcQ‡bi `iZwU we‡qvM Ki‡jB ^`N¨wU †ei n‡q hvq| Kv‡RB Avgiv hw` c_‡g Pjš †UbwUi †kl As‡ki `iZ gwc Ges Zvi wKQ¶Y ci †U‡bi mvg‡bi As‡ki `iZwU gwc Zvn‡j (7 bs Qwe) wK †U‡bi ^`N¨ cve? †UbwU w¯i _vK‡j †cZvg wKš †h‡nZ †UbwU Pj‡Q Avgiv mwVK ^`N¨ cve bv, KviY †U‡bi wcQ‡bi As‡ki `iZ gvcvi ci hLb mvg‡bi `iZUK gvc‡Z †MwQ ZZ¶‡Y †UbUv Av‡iv LwbKUv mvg‡b GwM‡q †M‡Q! Kv‡RB †U‡bi `iZ gvcvi GKUvB Dcvq–GKB mv‡_ †U‡bi †cQ‡bi Ask Ges mvg‡bi As‡ki `iZ gvcv|

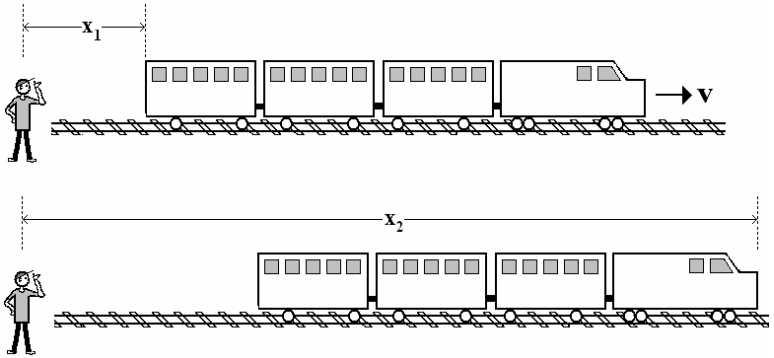

7 bs Qwe: †U‡bi wcQ‡bi As‡ki `iZ $x_1$ mvg‡bi As‡ki `iZ x_2, $x_2 - x_1$ †U‡bi `iZ n‡Z cviZ hw` †UbwU w¯i n‡Zv| †h‡nZ †UbwU GwM‡q hv‡"Q ZvB x_1 Ges x_2 gvcvi mgq LwbKUv mgq cvi n‡q †M‡j Avgiv mwVK ‰`N¨ gvc‡Z cvie bv| mwVK `iZ gvcvi Rb¨ GKB mg‡q x_1 Ges x_2 gvc‡Z n‡e|

Gev‡i Avgiv j‡i›U‡Ri i¦cvš‡ii mÎ¸‡jv e¨envi K‡i c‡iv welqUv Av‡iv ¯úó K‡i †`wL| aiv hvK, Zwg †i j jvB‡bi cv‡k `wo‡q †U‡bi †kl Ask Ges mvg‡bi As‡ki `iZ †g‡cQ h_vµ‡g $t_1$ Ges $t_2$ mg‡q| `iZUK †c‡qQ h_vµ‡g x_1 Ges x_2 | Gev‡i Avgiv mivmwi ej‡Z cwi †U‡bi †fZ‡i e‡m _vKv †Zvgvi eÜi Kv‡Q GB `iZ Avi mgq‡K g‡b n‡e (x'_1, x'_2) Ges (t'_1, t'_2), Avgiv †mUv wj‡LI †dj‡Z cwi:

$$x'_1 = \frac{x_1 - vt_1}{\sqrt{1 - \frac{v^2}{c^2}}}$$

$$x'_2 = \frac{x_2 - vt_2}{\sqrt{1 - \frac{v^2}{c^2}}}$$

$$t'_1 = \frac{t_1 - \frac{x_1 v}{c^2}}{\sqrt{1 - \frac{v^2}{c^2}}}$$

$$t'_2 = \frac{t_2 - \frac{x_2 v}{c^2}}{\sqrt{1 - \frac{v^2}{c^2}}}$$

Gev‡i x'_2 †_‡K x'_1 we‡qvM Ki‡j Avgiv cve †Zvgvi eÜi Kv‡Q gvcv †U‡bi ‰`N¨ KviY $x'_2$ Ges $x'_1$ n‡"Q Pjš †U‡b e‡m †U‡bi mvg‡bi Ask Ges †kl As‡ki `iZ| Kv‡RB:

$$x'_2 - x'_1 = \frac{x_2 - x_1}{\sqrt{1 - \frac{v^2}{c^2}}} - \frac{v(t_2 - t_1)}{\sqrt{1 - \frac{v^2}{c^2}}}$$

Avgiv Av‡MB e‡jwQ GKB mg‡q `iZ¸‡jv gvc‡Z n‡e Zv bv n‡j mwVK `iZ cve bv A_vr $t_1 = t_2$ n‡jB $x_2 - x_1$ n‡e †U‡bi ‰`N¨

Kv‡RB $$x'_2 - x'_1 = \frac{x_2 - x_1}{\sqrt{1 - \frac{v^2}{c^2}}}$$

$x_2' - x_1'$ n‡"Q †U‡b e‡m †_‡K gvcv †U‡bi `iZ †hUv‡K Avgiv ej‡Z cwi L_0 †Zvgvi eÜ GUv †g‡c‡Q| Zvi Kv‡Q †UbUv w¯i - Kv‡RB L_0 n‡"Q w¯i Ae¯vq _vKv †Kv‡bv wKQi ``N¨| Avi $x_2 - x_1$ n‡"Q †Ub jvB‡bi cv‡k `wo‡q †Zvgvi gvcv †U‡bi `iZ †hUv‡K Avgiv ewj $L$, g‡b †i‡Lv †Zvgvi Kv‡Q †UbUv MwZkxj, Kv‡RB $L$ n‡"Q MwZkxj †Kv‡bv e¯i ``N¨| Kv‡RB †`L‡Z cw"Q:

$$L = L_0\sqrt{1 - \frac{v^2}{c^2}}$$

wVK Av‡M Avgiv †hUv †c‡qwQjvg| Gev‡i Avgiv j‡i›U‡Ri i¦cvši mÎ e¨envi K‡i †h‡nZ ``‡N¨i ms‡KvPb †ei K‡iwQ ZvB evowZ Av‡iv GKUv KvR Ki‡Z cwi †hUv Av‡M Ki‡Z cwi wb| †mUv n‡"Q $t_2' - t_1'$ Uv †ei K‡i †`L‡Z cwi, Zwg GKB mg‡q `iZ †g‡c _vK‡jI †Zvgvi eÜi Kv‡Q †mUv Kx g‡b n‡q‡Q? Kv‡RB:

$$t'_2 - t'_1 = \frac{t_2 - t_1}{\sqrt{1 - \frac{v^2}{c^2}}} - \frac{\frac{v(x_2 - x_1)}{c^2}}{\sqrt{1 - \frac{v^2}{c^2}}}$$

Avgiv $t_2 = t_1$ a‡iwQ Kv‡RB:

$$t'_2 - t' = -\frac{\frac{v(x_2 - x_1)}{c^2}}{\sqrt{1 - \frac{v^2}{c^2}}}$$

hvi A_ †Zvgvi eÜi Kv‡Q g‡b n‡e $t'_1 = t'_2$ bq, A_vr Zwg GKB mv‡_ †U‡bi mvg‡bi Ask Ges wcQ‡bi As‡ki `iZ gvc wb| †h‡nZ Wvb cv‡ki AskwU wb‡MwUf Kv‡RB $t'_2$ †_‡K $t'_1$ eo, A_vr Zwg mvg‡bi AskwUi `iZ †g‡cQ Av‡M wcQ‡bi As‡ki `iZ †g‡cQ c‡i! Kx wewPÎ, †`‡LQ? GLv‡b †K mwVK, Zwg bwK †Zvgvi eÜ? DËi n‡"Q `R‡bB mwVK! GUvB n‡"Q †¯úkvj w_lwi Ad wi‡jwUwfwUi gRv|

mg‡qi cmviY: Avevi

j‡i›U‡Ri i¦cvši e¨envi K‡i hw` Avgiv ^`‡N¨i ms‡KvPb †ei Ki‡Z cwi Zvn‡j wbðqB mg‡qi cmviYI †ei Ki‡Z cvie| KvRUv Ggb wKQ KwVb bq– †Zvgvi eÜ †U‡b e‡m †_‡K Zvi NwowU Pvj Kij| aiv hvK †mB mgqUv wQj t'_1, GKU ci NwoUv eÜ Ki‡e †mB mgqUv n‡e t'_2 GB mg‡qi cv_K¨UK n‡"Q Pjgvb †idv‡iÝ †d‡g mg‡qi cv_K¨| j‡i›U‡Ri i¦cvši w`‡q Avgiv †ijjvB‡bi cv‡k `wo‡q _vKv †Zvgvi mv‡c‡¶ †mB mgqUv‡K KZUK mgq g‡b n‡q‡Q †mUv †ei Kie|

Avgiv ûeû Av‡Mi g‡Zv K‡i AvMvB, hw`I Avgv‡`i D‡Ïk¨ mgq gvcv wKš Avgiv †`LwQ w_lwi Ad wi‡jwUwfwU‡Z mgq Avi `iZ Avi Avjv`v wKQ bv, GKUvi mv‡_ Av‡iKUv Rwo‡q _v‡K ZvB mgq gvc‡Z n‡j `iZUvI gvc‡Z nq| Kv‡RB Avgiv a‡i wbB †U‡b e‡m †Zvgvi eÜ Zvi NwowUi `iZ Avi mgq †g‡c‡Q| c_‡g wQj †mUv $x'_1$ Ges $t'_1$, GKU c‡i †mUv n‡q‡Q $x'_2$ Ges $t'_2$ | j‡i›U‡Ri i¦cvš‡ii mÎ w`‡q GKU Av‡M Avgiv †ei K‡i †`wL‡qwQ, †mUv n‡"Q:

$$t'_2 - t'_1 = \frac{t_2 - t_1}{\sqrt{1-\frac{v^2}{c^2}}} - \frac{\frac{v(x_2 - x_1)}{c^2}}{\sqrt{1-\frac{v^2}{c^2}}}$$

Av‡Mi evi GKB mg‡q †g‡cwQj e‡j $t_1 = t_2$ wQj, Gev‡i Avi †mwU mwZ¨ bq| Avgiv w¯i †idv‡i‡Ýi Zjbvq gvcv mgq $(t_2 - t_1)$ Gi mv‡_ Pjgvb †idv‡iÝ †d‡g gvcv mgq $(t'_2 - t'_1)$ †ei K‡iwQ wVKB wKš †mUv ^`N¨ ms‡KvP‡bi g‡Zv m›`i GKUv mÎ nq wb- Zvi mv‡_ †j‡Ri g‡Zv Av‡iv GKUv Ask i‡q †M‡Q| hw` $x_1 = x_2$ n‡Zv Zvn‡j †mUv kb¨ n‡q

Avgv‡`i Sv‡gjv PwK‡q w`Z wKš Avgiv Rwb $x_1 = x_2$ bq| Zvi KviY †Zvgvi eÜ †U‡b e‡m Av‡Q, †UbUv v †e‡M Q‡U hv‡"Q| c_gevi hLb mgq †g‡c‡Q Zvi LwbKUv c‡i wØZxqevi mgq †g‡c‡Q Ges GB mg‡qi gv‡S †Ub †ek LwbKUv `i GwM‡q †M‡Q Kv‡RB Zv‡`i Ae¯v‡bi cwieZb n‡q †M‡Q, x_1 wKQ‡ZB x_2 Gi mgvb bq| Avgiv m›`i GKUv mÎ cw"Q bvÑwKš Avgiv Rwb m›`i GKUv mÎ Av‡Q, Avgiv Av‡M †mUv †`‡LwQ! Kv‡RB GKU Ab¨fv‡e AMmi nB|

mevi wbðqB g‡b Av‡Q Avgiv hLb j‡i›U‡Ri i¦cvši †ei K‡iwQjvg †h †Zvgvi eÜ hw` GKU †Mvqvi ai‡Yi nq Avi †m hw` `we Ki‡Z _v‡K Zvi †Ub w¯i †m w¯i Ges Zvi Pvicv‡ki mewKQ–†UbjvBb, †÷kb MvQcvjv D‡ëw`‡K v †e‡M QU‡Q Zvn‡j wK n‡e? Avgiv e‡jwQjvg †mUvI c‡ivcwi mwZ¨ Ges Zvi R‡b¨ j‡i›UR i¦cvši n‡e GiKg:

$$x = \frac{x' + vt'}{\sqrt{1 - \frac{v^2}{c^2}}}$$

$$t = \frac{t + \frac{x'v}{c^2}}{\sqrt{1 - \frac{v^2}{c^2}}}$$

†h‡nZ GB mÎ¸‡jv c‡ivcwi mwVK Ges Avm‡j GKU Ab¨fv‡e †jLv GKB mÎ Zv n‡j G¸‡jv e¨envi Ki‡Z wbðqB †Kv‡bv mgm¨v †bB| Zv n‡j Avgiv wfb wfb Ae¯v‡b gvcv Avi `i‡Zi R‡b¨ wjwL‡Z cwi:

$$x_1 = \frac{x'_1 + vt'_1}{\sqrt{1-\frac{v^2}{c^2}}}$$

$$x_2 = \frac{x'_2 + vt'_2}{\sqrt{1-\frac{v^2}{c^2}}}$$

Ges
$$t_1 = \frac{t_1' + \frac{x_1' v}{c^2}}{\sqrt{1-\frac{v^2}{c^2}}}$$

$$t_2 = \frac{t_2' + \frac{x_2' v}{c^2}}{\sqrt{1-\frac{v^2}{c^2}}}$$

g‡b †i‡Lv GLv‡bv (x_1, x_2) Ges (t_1, t_2) n‡"Q †Zvgvi gvcv `iZ Ges mgq| $(x'_1, x'_2)$ Ges $(t'_1, t'_2)$ n‡"Q †Zvgvi eÜi gvcv `iZ Ges mgq|

Kv‡RB
$$t_2 - t_1 = \frac{t_2' - t_1'}{\sqrt{1-\frac{v^2}{c^2}}} - \frac{\frac{v(x_2' - x_1')}{c^2}}{\sqrt{1-\frac{v^2}{c^2}}}$$

†Zvgiv wbðqB GLb Pvjw‡KUv a‡i †d‡jQ †Zvgvi eÜ †h‡nZ †U‡b GKB RvqMvq e‡m Nwoi mgq †g‡c‡Q Kv‡RB $x'_2 - x'_1 = 0$ A_vr mgxKi‡Yi Wvb w`‡Ki wØZxq AskwU _vK‡Q bv, hvi A_

$$t_2 - t_1 = \frac{t_2' - t_1'}{\sqrt{1-\frac{v^2}{c^2}}}$$

hw` Av‡Mi g‡Zv ewj Pjgvb †idv‡iÝ †d‡g e‡m _vKv †Zvgvi eÜi Kv‡Q gvcv mgq n‡"Q t_0 Ges w¯i Ae¯vq _vKv †Zvgvi gvcv mgq n‡"Q t Zv n‡j

$$t = \frac{t_0}{\sqrt{1-\frac{v^2}{c^2}}}$$

wVK Av‡M Avgiv †hiKg †c‡qwQjvg| †h‡nZ Avgv‡`i m‡hvM Av‡Q Zv n‡j Avgiv $x_2 - x_1$ UvI †ei K‡i †`‡L †`wL:

$$x_2 - x_1 = \frac{x_2' - x_1'}{\sqrt{1-\frac{v^2}{c^2}}} + \frac{v(t_2' - t_1')}{\sqrt{1-\frac{v^2}{c^2}}}$$

Wvb cv‡ki c_g AskwU kb¨ KviY $x_2' = x_1'$ Kv‡RB _vK‡Q ïa:

$$x_2 - x_1 = \frac{v(t_2' - t_1')}{\sqrt{1-\frac{v^2}{c^2}}}$$

Kv‡RB Pjš †U‡b e‡m _vKv †Zvgvi eÜi Kv‡Q g‡b n‡q‡Q †m GKB RvqMvq e‡m `‡Uv mgq †g‡c‡Q, wKš †ijjvB‡bi cv‡k e‡m _vKv †Zvgvq g‡b n‡q‡Q †m †gv‡Ul GKB RvqMvq †bBÑwfb wfb RvqMvq †_‡K †m mgqUK †g‡c‡Q| wVK †hiKg nIqv DwPZ!

Av‡cw¶K fi

fi‡e‡Mi wbZ¨Zvi mÎ

hviv LwU c`v_weÁvbx Zviv Av‡cw¶K fi K_vUv †`‡L Le ivM Ki‡eb–wKš Ze Awg GUv wjLwQ, KviY †ewki fvM cvV¨ eB‡q w_lwi Ad wiwjwUwfwU †evSv‡bvi Rb¨ Av‡cw¶K f‡ii aviYvUv e¨envi Kiv nq| hviv LwU c`v_weÁvbx Zviv Av‡cw¶K f‡ii aviYv QvovB w_lwi Ad wi‡jwUwfwU e¨vL¨v K‡ib, wKš Av‡cw¶K f‡ii aviYvUv e¨envi Ki‡j welqUv †evSv A‡bK mnR nq| AZx‡Z A‡bK eo weÁvbxB †mUv K‡i‡Qb, AvgivI bv nq Kijvg!

welqUv †evSvi R‡b¨ Avevi †Zvgv‡K †ijjvB‡bi cv‡k `vov‡Z n‡e Ges Avevi a‡i wb‡Z n‡e †Zvgvi eÜ †U‡b K‡i hv‡"Q *v* †e‡M| Gev‡i `R‡bB GKB D"PZvq AvQ Ges `R‡bi Kv‡QB GKUv K‡i †MvjK| †MvjK¸‡jv ûeû GKiKg–A_vr †Zvgvi eÜ †U‡b IVvi Av‡M †Zvgvi †MvjKUvi mv‡_ Zvi †MvjKUv wgwj‡q †`‡L‡Q Zv‡`i fi mgvb, AvKvi-AvKwZ mgvb|

hvB †nvK, †Zvgvi Ges †Zvgvi eÜi Ici `wqZ †h †Zvgiv G‡K A‡b¨i w`‡K †MvjK `‡Uv Ggbfv‡e Q‡o †`‡e †hb †MvjK `‡Uv †VvKv †L‡q Avevi †Zvgv‡`i nv‡Z wd‡i Av‡m! (cw_ex‡Z GB cix¶vUv Ki‡j gva¨vKlY kw³i R‡b¨ Avm‡j †MvjK `‡Uv wb‡P c‡o †h‡Z PvB‡e ZvB AvcvZZ a‡i wbB gva¨vKlY kw³ †bB–A_vr †MvjKUv Q‡o w`‡j †mUv †mvRv mvg‡b hvq Ges †Kv_vI av°v †L‡j †mvRv wd‡i Av‡m!)

Gev‡i Avgiv cix¶vUv Kwi, †U‡b K‡i †Zvgvi eÜ Avm‡Q, Zwg †ijjvB‡bi cv‡k `wo‡q AvQ, wbw`ó mg‡q †Zvgiv `R‡bB †Zvgv‡`i †MvjK `‡Uv Q‡o w`j, GKB †e‡M, wVK gvSLv‡b ej `‡Uv †VvKv †L‡q, †Zvgvi †MvjKUv †Zvgvi nv‡Z wd‡i Gj, †Zvgvi eÜi †MvjKUv †Zvgvi eÜi nv‡Z wd‡i †Mj|

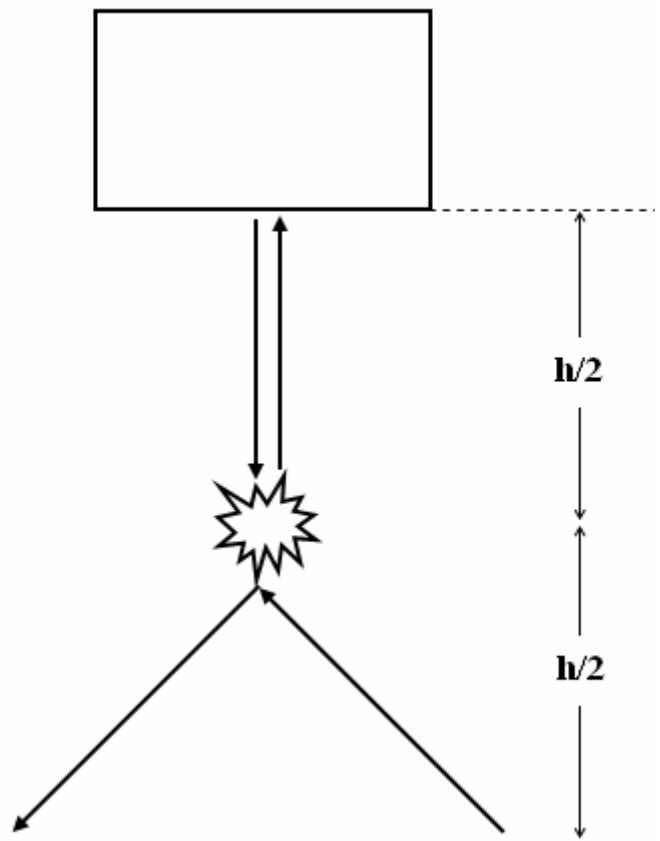

8 bs Qwe: †Zvgvi eÜi Kv‡Q g‡b n‡q‡Q †UbUv w¯i–‡MvjKUv †mvRv mvg‡b wM‡q, Avevi wb‡Ri Kv‡Q wd‡i G‡m‡Q| †Zvgvi eÜ †`‡L‡Q Zwg †MvjKUv Q‡oQ †KvbvKwb, Ges Zwg bZb RvqMvq m‡i wM‡q †MvjKUv a‡iQ!

†Kv‡bv GKRb hw` †U‡bi Qv‡` e‡m GB `k¨Uv †`LZ Zv n‡j †m †Kgb †`LZ †mUv 8 bs Qwe‡Z †`Lv‡bv n‡q‡Q| Avevi †KD hw` †Zvgvi Dc‡i S‡j †_‡K †Kv‡bvfv‡e `k¨Uv †`LZ Zv n‡j Zvi Kv‡Q `k¨Uv †Kgb †`L‡Z †mUv 9 bs Qwe‡Z †`Lv‡bv n‡q‡Q| c‡iv e¨vcvi hw` Avgiv wVKfv‡e e‡S _wK Zv n‡j Aí GKU AsK Kiv hvK|

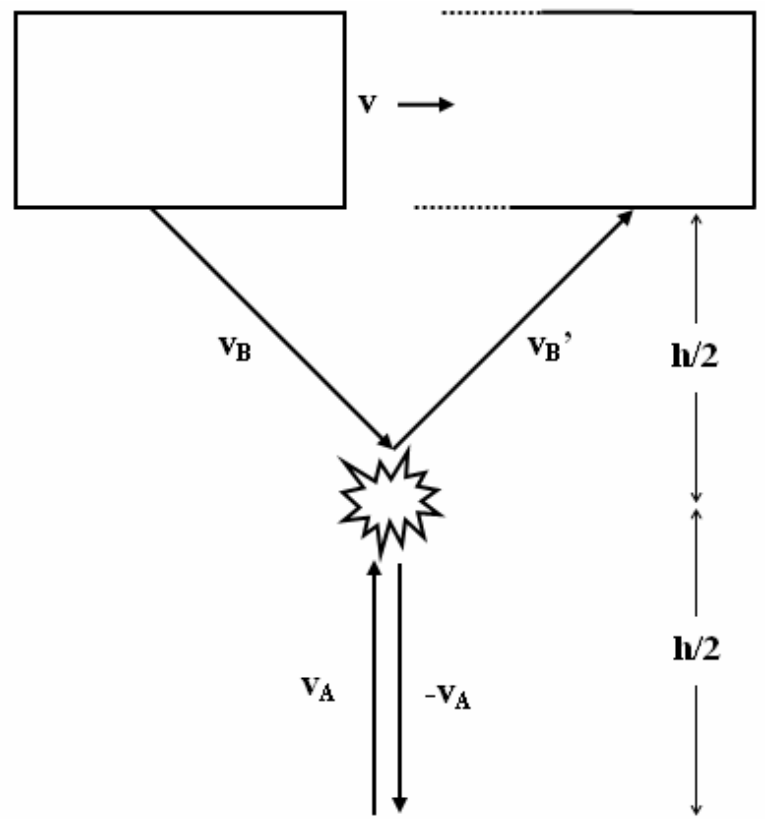

9 bs Qwe: Zwg †`LQ †MvjKUv †mvRv mvg‡b wM‡q‡Q, eÜi †Mvj‡K †VvKv †L‡q †Zvgvi Kv‡Q wd‡i G‡m‡Q| †Zvgvi g‡b n‡q‡Q eÜi †MvjKUv Avm‡Q †KvbvKwb fv‡e, †Zvgvi †Mvj‡K †VvKv †L‡q w`K cwieZb K‡i †Zvgvi eÜi bZb Ae¯vq wd‡i †M‡Q|

Zwg ej‡e GiKg: Avgvi †MvjKUvi fi m_0, Awg †MvjKUv‡K Q‡o w`‡qwQ mvg‡b, †mUv $t_0/2$ mgq c‡i †VvKv †L‡qQ Ges wd‡i G‡m‡Q Av‡iv $t_0/2$ mg‡q| †h‡nZ Avgvi Ges †U‡bi †fZiKvi `iZ h, Kv‡RB GUv †VvKv †L‡q‡Q wVK gvSLv‡b A_vr, $\frac{h}{2}$ `i‡Z| hvi A_ ejUv hw"Qj v_A †e‡M

$$v_A = \left(\frac{h}{2}\right) / \left(\frac{t_0}{2}\right) = \frac{h}{t_0}$$

†MvjKUv †VvKv LvIqvi ci †mUv wd‡i G‡m‡Q v_A †e‡M, Kv‡RB fi‡e‡Mi cwieZb

$$m_0 v_A - (-m_0 v_A) = 2m_0 v_A = \frac{2m_0 h}{t_0}$$

GLb hw` †Zvgv‡K †Zvgvi eÜi †MvjKUv m¤ú‡K ej‡Z ejv nq Zv n‡j Zwg ej‡e Gfv‡e: Awg Rwb Avgvi †Mvj‡Ki fi n‡"Q $m_0$, Avgvi eÜ †h‡nZ Pjš †U‡b Av‡Q, Ges Avgiv B‡Zvg‡a¨ †`‡LwQ Pjš RvqMvq ^`‡N¨i ms‡KvPb nq mg‡qi cmviY nq Kv‡RB f‡iil cwieZb n‡Z cv‡i, Kv‡RB †m hLb †MvjKUv Q‡o w`‡q‡Q Zvi fi KZ Awg Rwb bv| a‡i wbB †mUv m. †`Lv hv‡"Q Pjš †Ub †_‡K †m †KvbvKwb †MvjKUv Q‡o‡Q $v_B$ †e‡M, Avgvi †Mvj‡K †VvKv †L‡q †mUv w`K cwieZb K‡i †Kv‡bvKwb wd‡i †M‡Q v'_B †e‡M| v_BGes v'_B `wU †e‡MiB GKUv Ask n‡"Q †U‡bi †eM $v$, †VvKv LvIqvi ci †mB As‡ki †Kv‡bv cwieZb nq wb| cwieZb n‡q‡Q ïa mvg‡b-wcQ‡bi Ask| †mUvI †ei Kiv hvq Le mn‡R, $\frac{h}{2}$ `iZ‡K AwZµvš mgq w`‡q fvM K‡i| †h‡nZ †m Pjš †U‡b Av‡Q, Awg Rwb Avgvi mgq‡K $\sqrt{1-\frac{v^2}{c^2}}$ w`‡q fvM Ki‡jB Zvi mgqUv †c‡q hve| Kv‡RB Zvi †Mvj‡Ki fi‡e‡Mi cwieZb

$$\frac{2mh}{t} = \frac{2mh}{\frac{t_0}{\sqrt{1-\frac{v^2}{c^2}}}} = \frac{2mh}{t_0}\sqrt{1-\frac{v^2}{c^2}}$$

GZ¶Y Avgiv hw³ZK e¨envi K‡iwQ, Gev‡i GKU c`v_weÁvb e¨envi Kwi| c`v_weÁv‡b ejv nq †Kv‡bv ej (Force) c‡qvM Kiv bv n‡j fi‡e‡Mi †Kv‡bv cwieZb n‡Z cvi‡e bv| GLv‡b †Kv‡bv ej (Force) c‡qvM Kiv nq wb–Kv‡RB fi †e‡Mi †Kv‡bv cwieZb n‡Z cvi‡e bv, A_vr †Zvgvi †Mvj‡Ki fi‡e‡Mi †h cwieZb n‡q‡Q, †Zvgvi eÜi †Mvj‡Ki (wecixZ w`‡K) wVK mgvb cwieZb n‡Z n‡e †hb me wgwj‡q †Kv‡bv cwieZb bv nq| A_vr

$$\frac{2m_0h}{t_0} = \frac{2mh}{t_0}\sqrt{1-\frac{v^2}{c^2}}$$

wKsev: $$m = \frac{mo}{\sqrt{1-\frac{v^2}{c^2}}}$$

GLv‡b m_0 n‡"Q †Zvgvi †Mvj‡Ki fi, m n‡"Q †Zvgvq eÜi †Mvj‡Ki fi ev Av‡cw¶K fi (Relativistic mass)| Avgiv Av‡MB e‡jwQ `R‡bi †MvjKB wQj ûeû GK iKg Ges Zv‡`i fil wQj mgvb| †Zvgvi eÜi †MviKUvi fi wKš GLb m_0 bq, m_0 †_‡K †ewk| w_lwi Ad wi‡jwUwfwU ej‡Q, GKUv e¯ hw` MwZkxj nq Zv n‡j Zvi fi †e‡o hvq| KZ MwZ‡Z e¯i fi kZKiv KZ fvM †e‡o hvq †mUv 3bs ZwjKvq †`qv nj:

wi‡jwUwfw÷K fi

Kv‡RB GKUv e¯i †eM †Kb KL‡bv Av‡jvi †e‡Mi mgvb n‡Z cv‡i bv †mUv GLb †evSv mnR| †Kv‡bwKQi †eM evov‡Z n‡j †mLv‡b ej c‡qvM Ki‡Z

nq| hviv wbDU‡bi wØZxq mÎ c‡o‡Q Zviv mevB Rv‡b ej c‡qvM Ki‡j fi‡e‡Mi cwieZb nq| wbDU‡bi mÎ hLb cov n‡q‡Q ZLb mevB RvbZ f‡ii cwieZb nq bv– ZvB a‡i †bqv n‡q‡Q †e‡Mi cwieZb n‡e– A_vr †eM †e‡o hv‡e|

3 b¤i ZwjKv

MwZ‡eM	fi †e‡o hvlqv
$10\,km/h$ (nvUv)	2×10^{-14} %
$100\,km/h$ (Mwo)	2×10^{-12} %
$1000\,km/h$ (†cb)	2×10^{-10} %
$15\,km/s$ (i‡KU)	2×10^{-7} %
$0.1c$	2.0 %
$0.99c$	7.0 ¸Y
$0.999c$	22.0 ¸Y
$0.999999\,c$	700 ¸Y

GLb Avgiv †`L‡Z cw"Q †e‡Mi mv‡_ mv‡_ f‡iil cwieZb nq| A_vr †Kv‡bv e¯i Dci ej c‡qvM Ki‡j Zvi fi‡e‡Mi cwieZb nq `fv‡e, f‡ii cwieZb n‡q Ges †e‡Mi cwieZb n‡q| †eM hLb Kg ZLb f‡ii cwieZb GZ Kg †h †mUv‡K we‡ePbvi gv‡S Avbvi †Kv‡bv c‡qvRb †bB| hLb †eM †e‡o Av‡jvi †e‡Mi KvQvKwQ P‡j Av‡m ZLb †mUv‡K we‡ePbvi gv‡S Avb‡ZB n‡e| ZvB †KD hw` ej c‡qvM K‡i K‡i †eM evov‡Z evov‡Z Av‡jvi †e‡Mi KvQvKwQ Avmvi †Póv K‡i †m †`L‡e †eM bv †e‡o fi †e‡o hv‡"Q! Avgiv †`L‡ZB cw"Q hw` †eM KL‡bv Av‡jvi †e‡Mi mgvb n‡q hvq Zv n‡j fi‡K Amxg n‡q †h‡Z n‡e| †mUv †Zv Avi m¤e bq, ZvB †eM Avm‡j KL‡bvB Av‡jvi †e‡Mi mgvb n‡Z cv‡i bv|

$E = mc^2$ †Kgb K‡i cvB

cw_exi me‡P‡q weL¨vZ mÎ †KvbwU hw` KvD‡K wR‡Ám Kiv nq Zv n‡j wbtm‡›`‡n Zvi DËi n‡e $E = mc^2$ †hLv‡b ejv n‡q‡Q e¯i fi Avi kw³

GKB K_v| †Kv‡bv e¯‡K hw` kw³‡Z i¦cvšwiZ Kiv nq Zv n‡j Zvi cwigvY n‡e wekvj, f‡ii mv‡_ Av‡jvi MwZi e‡Mi ¸Yd‡ji mgvb| welqUv †h ïa GKUv KvM‡R Kj‡gi mÎ Zv bq, fi‡K kw³‡Z i¦cvši K‡i wbDwKqvi †evgv ˆZwi n‡q‡Q| wØZxq gnvh‡×i mgq †mB wbDwKqvi †evgv Rvcv‡bi wn‡ivwkgv Ges bvMvmwK‡Z e¨envi K‡i gn‡Zi gv‡S cvq j¶ gvbl‡K nZ¨v Kiv n‡qwQj|

hvB †nvK Avgiv w_lwi Ad wi‡jwUwfwUi c‡Z¨KUv mÎ †ei K‡iwQ| Kv‡RB $E = mc^2$ GB mÎUv hw` †ei bv Kwi Zv n‡j †Kgb n‡e? Z‡e mgm¨v n‡"Q LwbKUv K¨vjKjvm QvovGUv mwVK fv‡e †ei Kiv hvq bv, wKš Avgiv wVK K‡iwQ †Kv‡bv K¨vjKjvm QvovB Avmiv c‡iv eBUv wjLe| ZvB Av‡MB e‡j ivLwQ Avgiv †hfv‡e $E = mc^2$ †ei Kie †mB c×wZUv wb‡q †KD †KD AvcwË Ki‡Z cv‡i| LwU c`v_weÁvbxiv Gfv‡e mÎUv †ei Ki‡Z †`L‡j GKU wei³ n‡Z cv‡ib wKš Zel Avgiv †Póv K‡i †`wL|

g‡b Kwi GKUv e¯ G‡Kev‡i Av‡jvi †e‡Mi KvQvKwQ †e‡M Q‡U hv‡"Q| G‡Kev‡iB Av‡jvi †e‡Mi KvQvKwQ †cŠ‡Q †M‡Q †h Kvi‡Y Zvi lci ej c‡qvM Ki‡j †eMUv Avi evo‡Z cv‡i bv, fiUv Av‡iKU †e‡o hvq| GiKg Ae¯vq Avgiv hw` Zvi lci t mgq R‡o F ej c‡qvM Kwi Zv n‡j Kx n‡e?

c`v_weÁv‡bi cPwjZ mÎ Abhvqx †Kv‡bv e¯I Dci ej c‡qvM Kiv n‡j Zvi MwZ ev‡o Kv‡RB Zvi MwZkw³ evo‡Z _v‡K| e¯Uvi MwZ hw` nq v Zvn‡j Zvi cwZ †m‡K‡Û kw³ †e‡o hvq Fv. hvi A_ t mgq R‡o hw` ej c‡qvM Kiv nq Zvn‡j Zvi †e‡o hvlqv kw³ ΔE n‡e:

$$\Delta E = Fvt$$

Avgiv Av‡MB e‡jwQ Avgv‡`i GB e¯Uv G‡Kev‡i Av‡jvi †e‡Mi KvQvKwQ hv‡"Q Kv‡RB Avgiv v Gi RvqMvq c wjL‡Z cwi, A_vr:

$$\Delta E = Fct$$

Avgiv mevB Rwb F ev ej n‡"Q e¯i fi‡e‡Mi cwieZ‡bi nvi| Avgiv †h D`vniYUv wb‡qwQ †mLv‡b e¯Uv Avm‡j G‡Kev‡i Av‡jvi †e‡Mi KvQvKwQ hv‡"Q Kv‡RB Zvi †eM Avi evo‡Z cvi‡e bv, A_vr Zvi fi‡e‡Mi

cwieZb Avm‡j f‡ii cwieZb Δm. A_vr fi‡e‡Mi cwieZ‡bi nvi ev ch³ evej F n‡"Q:

$$F = \frac{(\Delta mc)}{t}$$

GLb kw³i mÎUv‡Z hw` F Gi gvb emvB Zv n‡j cvB

$$\Delta E = \frac{(\Delta mc)}{t} ct$$

Kv‡RB

$$\Delta E = \Delta mc^2$$

A_vr kw³i cwieZbUK n‡"Q f‡ii cwieZb Gi mv‡_ c^2-Gi ¸bdj, Kv‡RB c‡iv kw³ n‡"Q

$$E = mc^2$$

Avgiv GUv †ei K‡iwQ Le mnR wbq‡g, c`v_weÁvbxiv B‡"Q Ki‡j Avgv‡`i †Kv‡bv †Kv‡bv hw³‡K ck Ki‡Z cv‡ib| Avgiv Av‡MB e‡jwQ GUv Av‡iv wbLZfv‡e †ei Kiv m¤e wKš Zvi R‡b¨ GKU K¨vjKjvm `iKvi| GB eBwU‡Z Awg †Kv‡bv K¨vjKjvm e¨envi Ki‡Z PvB bv| Kv‡RB Avgiv †`L‡Z cw"Q $E = mc^2$

m Gi RvqMvq Av‡cw¶K fi †jLv n‡j †mwU n‡e

$$E = \frac{m_o c^2}{\sqrt{1 - \frac{v^2}{c^2}}}$$

w_lwi Ad wi‡jwUwfwU ev Av‡cw¶K m‡Îi me‡P‡q ¸i"ZcY m‡Îi g‡a¨ GwU n‡"Q GKwU| hw` v Gi gvb Kg nq Zv n‡j Avgiv wjL‡Z cwi:

$$E = m_0c^2\left(1-\frac{v^2}{c^2}\right)^{-\frac{1}{2}}$$

$$E \cong m_0c^2\left(1+\frac{v^2}{2c^2}\right)$$

$$E \cong m_0c^2 + \frac{1}{2}mv^2$$

GB mÎUvi gv‡S Avgv‡`i cwiwPZ MwZkw³ $\frac{1}{2}mv^2$ i‡q‡Q| hw` MwZ‡eM $v = 0$ nq Zv n‡j wKš kw³i gvb kb¨ n‡q hvq bv, †mUv nq:

$$E \cong m_0c^2$$

GB kw³Uv‡K e¯i w¯i kw³ ev Rest Energy e‡j| GB mÎUvB c`v_weÁv‡bi RM‡Z GKUv hMvšKvix cwieZ‡bi mPbv K‡i|

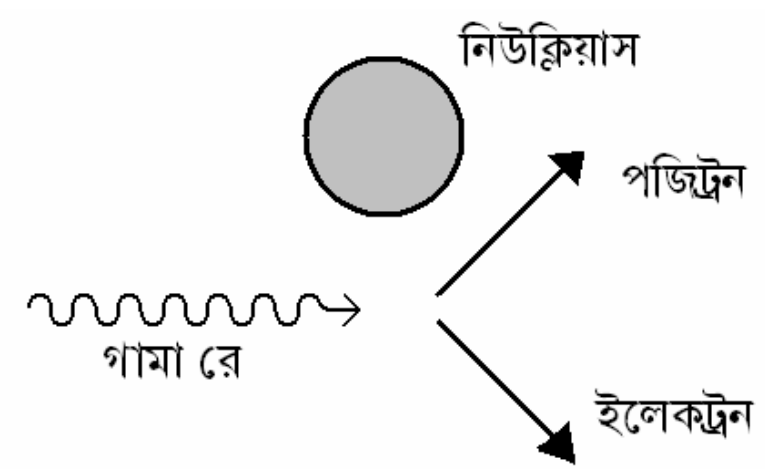

10 bs Qwe: †cqvi †cvWvKk‡b kw³kvjx GKUv Mvgv †i GKwU B‡jKUb Ges GKUv cwRU‡b cv‡ë hvq| fi‡e‡Mi wbZ¨Zvi mÎ‡K wVK ivLvi R‡b¨ KvQvKwQ GKUv wbDwKqvm ev fi _vK‡Z nq|

fi Ges kw³i wgwjZ wbZ¨Zvi mÎ

GK mgq aviYv Kiv n‡Zv kw³i GKwU wbZ¨Zvi mÎ i‡q‡Q, A_vr kw³i aŸsmI †bB mwóI †bB| GKiKg kw³ ïa Ab¨iKg kw³‡Z i¦cvši Kiv hvq| w¯wZkw³‡K MwZkw³‡Z i¦cvši Kiv hvq, MwZkw³‡K Zvckw³‡Z i¦cvši Kiv hvq, Zvckw³‡K Av‡jv kw³‡Z i¦cvši Kiv hvq BZ¨w`|

wVK †miKg aviYv Kiv n‡Zv e¯i f‡ii GKwU wbZ¨Zvi mÎ i‡q‡Q| f‡ii mwó †bB Ges aŸsm †bB| AvBb÷vB‡bi GB Awebki mÎ w`‡q nVvr K‡i fi Ges kw³‡K GK RvqMvq wb‡q Avmv n‡jv| cw_exi weÁvbxiv mwe¯§‡q Awe®vi Ki‡jb fi †_‡K kw³ ˆZwi Kiv hvq Avevi kw³ †_‡KI fi ˆZwi Kiv hvq| bZb GKUv wbZ¨Zvi mÎ ˆZwi n‡jv †mUv n‡"Q fi Ges kw³i wgwjZ wbZ¨Zvi mÎ|

fi †_‡K hLb kw³‡Z i¦cvšwiZ Kiv nq ZLb AZ¨š ¶` fi †_‡K wekvj kw³ ˆZwi nq| Avgiv Le †e`bvi mv‡_ †mUv †`‡LwQ wn‡ivwkgv Ges bvMvmwK‡Z, †hLv‡b wbDwKqvm †evgv‡Z fi‡K kw³‡Z i¦cvši K‡i gn‡Zi gv‡S c‡iv kni‡K aŸsm K‡i †`qv n‡qwQj, j¶ j¶ gvbl Zv‡`i cvY nwi‡qwQj| Avevi kw³ †_‡K fi ˆZwi nlqvi D`vniY c`v_weÁvbxiv AninB †`L‡Z cvb| me‡P‡q mnR D`vniY n‡"Q †cqvi c¨vWvKkb (10 bs Qwe) †hLv‡b kw³kvjx GKUv Mvgv †i GKwU B‡jKUb Ges GKUv cwRU‡b cv‡ë hvq, kw³UK †_‡K `wU KYv ˆZwi nq hvi fi i‡q‡Q| (gRvi e¨vcvi n‡"Q †cqvi †c¨vWvKk‡bi R‡b¨ KvQvKwQ GKUv wbDwKqvm ev fi _vK‡Z nq- Mvgv †i †h fi‡eM wb‡q Av‡m †mUv‡K MnY K‡i fi‡e‡Mi wbZ¨Zvi mÎ‡K wVK ivLvi R‡b¨|)

¯vbvs‡Ki i/cvši

¯vbvsK

aiv hvK Zwg †Zvgvi eviv›`vq e‡m AvQ, ZLb †`L‡j GKUv cwL D‡o G‡m †Zvgvi Kwb‡k e‡m‡Q| †Zvgv‡K hw` wR‡Ám Kwi, ÒcvLxUv †Kv_vq?Ó MwY‡Zi fvlvq †Zvgvi R‡b¨ ejv me‡P‡q mnR n‡e, Ò†mvRv mvg‡bi w`‡K `B wgUvi Zvici evgw`‡K GK wgUvi, †mLvb †_‡K Ic‡ii w`‡K †`o wgUvi|Ó (11 bs Qwe) Zwg GKU wPšv Ki‡jB †`L‡e Avm‡j wZbwU `i‡Zi ^`N¨ e‡j w`‡jB Avgiv Avgv‡`i mv‡c‡¶ †h †Kv‡bv e¯i Ae¯vbUv c‡ivcwi wbw`ó K‡i †dj‡Z cvie| Avgv‡`i cwiwPZ RMrUv wÎgwÎK ZvB memg‡qB wZbwU `i‡Zi (¯vbvsK)`iKvi nq|

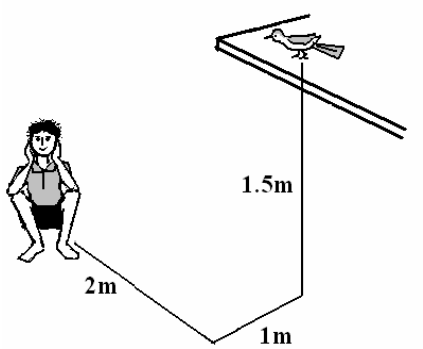

11 bs Qwe: mvg‡b 2.0 wgUvi wM‡q, evgw`‡K 1.0 wgUvi wM‡q, Dc‡i 1.5 wgUvi †M‡jB cvLxUv cvIqv hv‡e|

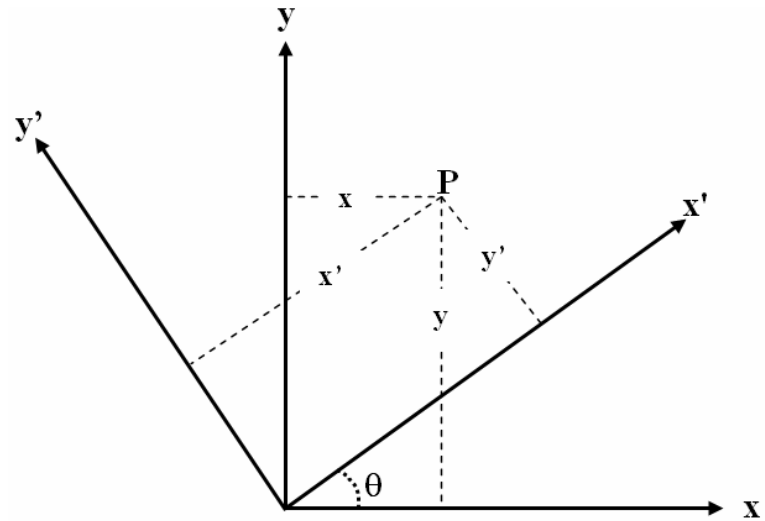

12 bs Qwe: Zwg ZwK‡q AvQ x w`‡K, $y$ n‡"Q evg w`K| cwLUvi Ae¯vb n‡"Q (x, y) †Zvgvi eÜiv ZwK‡q Av‡Q x' w`‡K Zvi evg w`K n‡"Q y' †Zvgvi eÜi Kv‡Q cvLxUvi Ae¯vbv (x', y')

e¨vcviUv †evSvi R‡b¨ Avgiv AvcvZZ D"PZvUv wb‡q gv_v bv Nvgvjvg, Zvn‡j wn‡mecÎ GKU mnR n‡e| †KD hw` D"PZvUv Avb‡ZB Pvq †mUv wdwi‡q Avbv Ggb wKQ KwVb bq| AvcvZZ Avgiv `‡Uv gvÎv wb‡qB gv_v NvgvBÑ (A_vr a‡i wbB, cwLUv evmvi Kwb‡k bv e‡m, e‡m‡Q evmvi D‡Vv‡b|) Zwg †hLv‡b e‡m Av‡Q Zvi Zjbvq cwLUv‡K wbw`ó Ki‡Z n‡j GLb ïa `wU ^`N¨‡K wbw`ó Ki‡Z n‡e, †Zvgvi †_‡K KZUK mvg‡b Ges †mLvb †_‡K KZUK ev‡g| (cwLUv hw` mvg‡bi w`‡K bv †_‡K wcQ‡bi w`‡K _v‡K Zv n‡j mvg‡bi ^`N¨Uv n‡e wb‡MwUf, evg w`‡K bv †_‡K Wvb w`‡K _v‡K Zv n‡j evg w`‡Ki ^`N¨Uv n‡e wb‡MwUf, wKš bZb †Kv‡bv ^`N¨ wb‡q gv_v Nvgv‡Z n‡e bv GB `‡Uv ^`N¨B h‡_ó)|

GLb aiv hvK †Zvgvi eÜ wVK †Zvgvi cv‡k G‡m e‡m‡Q, †mI D‡Vv‡b emv cwLUv‡K †`‡L‡Q| †Zvgiv `Rb hw` GKB w`‡K ZwK‡q _vK Zv n‡j `R‡bB ej‡e cvLxUv $x$ wgUvi mvg‡b Ges $y$ wgUvi ev‡g| wKš †Zvgvi eÜ hw` GKU N‡i e‡m? Zvn‡j †m Kx ej‡e? †m Aek¨B wfb wKQ ej‡e, †m

nq‡Zv ej‡e x' wgUvi mvg‡b Ges y' wgUvi ev‡g| e¨vcviUv **12** bs Qwe‡Z †`Lv‡bv n‡q‡Q| $x:y$ GKUv †Kv-AwW‡bU wm‡÷g Ges $x':y'$ Av‡iKUv †Kv-AwW‡bU wm‡÷g|

GLb †Zvgvi eÜi `wU `iZ x', y' Ges †Zvgvi `wU `iZ x, y -Gi gv‡S m¤úK Kx? a‡i wbw"Q hviv GB eBUv co‡Q Zviv $sin\theta, cos\theta$ Gme Rv‡b, ZeI Av‡iKevi g‡b Kwi‡q †`qv hv‡Z cv‡i (13 bs Qwe)|

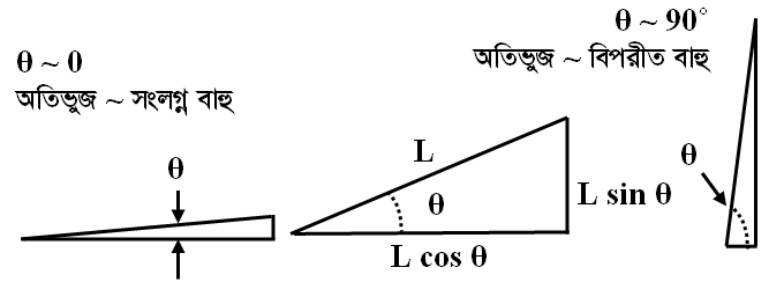

13 bs Qwe: mg‡KvYx wÎf‡Ri msjM evû/AwZfR = $cos\theta$
j¤/ AwZfR = $sin\theta$

GKUv mg‡KvYx wÎf‡Ri AwZf‡Ri ``N¨ $L$, ZLb msjM evû‡K ejv nq $L\ cos\theta$ Avi wecixZ evû‡K ejv nq $L\ Sin\theta, \theta$ hZ †QvU nq msjM evûi ``N¨ ZZB AwZf‡Ri ``‡N¨i KvQvKwQ n‡q hvq| Avevi $\theta$ hZ eo n‡Z _v‡K msjM evûi ``N¨ ZZB AwZf‡Ri ``‡N¨i KvQvKwQ n‡Z _v‡K|

Gev‡i Avgiv ïi" Kwi| Zwg Ges †Zvgvi eÜ `R‡biB e‡mQ $O$ we›`‡Z, cwLwU e‡m‡Q P we›`‡Z| †Zvgvi †Kv-AwW‡bU wm‡÷g n‡"Q $x$ I $y$. Zwg $x$ Ges $y$ GB `wU `iZ w`‡q cvLxi Ae¯vbUv wbw`ó KiQ| †Zvgvi eÜ wbw`ó Ki‡Q x' Ges y' w`‡q| Avgv‡`i D‡Ïk¨ (x',y') Ges (x, y) gv‡S GKUv m¤úK L‡R †ei Kiv|

14 bs Qwe‡Z †`Lv hv‡"Q $P$ we›`wU O we›`i mv‡c‡¶ `wU ``N¨ w`‡q wbw`ó Kiv n‡q‡Q, †mB `wU ``N¨ n‡"Q:

$x = OC$

$y = CP$

P we›`wU $x':y'$ †Kv AwW‡bU wm‡÷g `wU `iZ w`‡q wbw`ó Kiv n‡q‡Q, †m¸‡jv n‡"Q

$x' = OB$

$y' = OE$

Avgiv †Póv Kie x' Ges y' †K x Ges y (Ges θ) w`‡q wjL‡Z|

14 bs Qwe‡Z †`LwQ

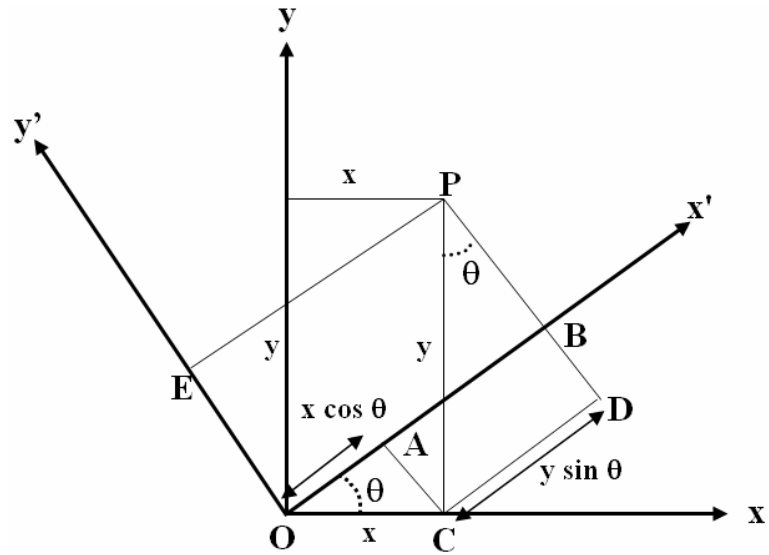

14 bs Qwe: x' †K x Ges y (Ges θ) w`‡q †jLv

$x' = OB = OA + AB$

$OA' = OC\ cos\theta = x\ cos\theta$

$AB = CD = PC\ sin\theta = y\ sin\theta$

A_vr, $x' = x\ cos\ \theta + y\ sin\ \theta$

GKB fv‡e 15 bs Qwe‡Z Avgiv †`LwQ:

$y' = OB = OA - AB$

$$OA = OC\ Cos\ \theta = y\ cos\ \theta$$
$$AB = CD = CP\ sin\ \theta = x\ sin\ \theta$$

A_vr, $y' = y\ cos\theta + x\ sin\ \theta$

Avgiv †hUv †ei Kivi K_v †mUv ‡ei K‡i †d‡jwQ, GKU ¸wQ‡q wjwL:

$$x' = x\ cos\ \theta + y\ sin\theta$$
$$y' = -x\ sin\ \theta + y\ cos\theta$$

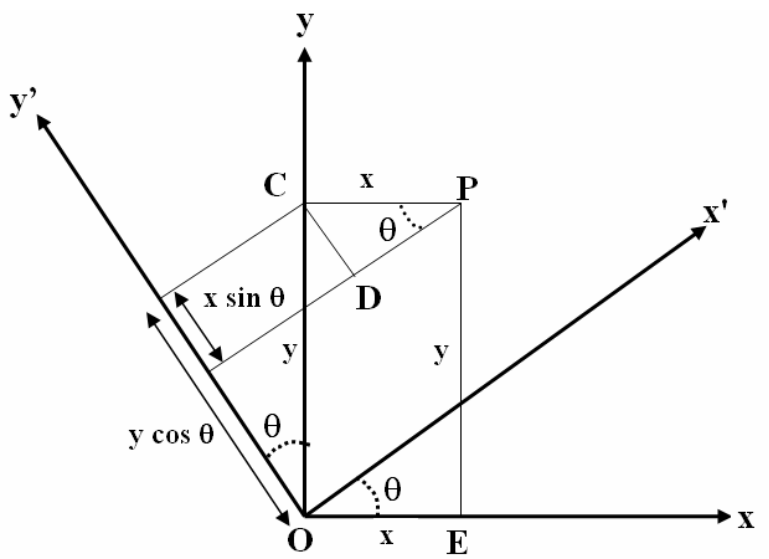

15 bs Qwe: y' †K x Ges y (Ges θ) w`‡q †jLv

Avwg Abgvb KiwQ mevB wbðqB GKU A‰ah¨ n‡q fve‡Q w_lwi Ad wi‡jwUwfwU Ki‡Z G‡m nVvr K‡i Avwg †Kv AwW‡bU R¨wgwZ ïi“ K‡i w`‡qwQ †Kb? GKU ˆah¨ ai‡jB mevB e¨vcviUv e‡S †dj‡e, wKš †mUv Kivi Av‡M Avgv‡`i Avi GKUv wRwbm Ki‡Z n‡e, †mUv n‡"Q g¨vwU‡·i ¸Yb| hviv Rv‡b bv ev f‡j †M‡Q Zv‡`i g‡b Kwi‡q †`qv hvK:

aiv hvK $A = \begin{pmatrix} a & b \\ c & d \end{pmatrix}$

$$x = \begin{pmatrix} x \\ y \end{pmatrix}$$

Zvn‡j $Ax = \begin{pmatrix} a & b \\ c & d \end{pmatrix}\begin{pmatrix} x \\ y \end{pmatrix} = \begin{pmatrix} ax + by \\ cx + dy \end{pmatrix}$

hvi A_ Avgiv GKU Av‡M hLb x' Ges y' †K x Ges y w`‡q wj‡LwQ †mUv‡K kU KvU K‡i g¨vwU·w`‡q wjL‡Z cvwi| †mUv n‡e GiKg:

$$\begin{pmatrix} x' \\ y' \end{pmatrix} = \begin{pmatrix} \cos\theta & \sin\theta \\ -\sin\theta & \cos\theta \end{pmatrix}\begin{pmatrix} x \\ y \end{pmatrix}$$

Avgiv GB g¨vwU‡·i w`‡K ZwK‡q ej‡Z cvwi †Mvov‡Z P we›`i `wU †Kv AwW‡bU wQj (x, y) GLb †mUv‡K θ †Kv‡Y Nwi‡q †bqv n‡q‡Q, bZb †Kv AwW‡bU wm‡÷‡g Zvi †Kv-AwW‡bU n‡"Q (x', y') gvSLv‡bi g¨vwU·Uv †mB cwieZbUv K‡i‡Q| e¨vcviUv †h mwZ¨ †mUv †evSvi Le mnR Dcvq Av‡Q| aiv hvK $\theta = 0$, A_vr †Kv‡bv cwieZbB nq wb| Zv n‡j $cos\ \theta = 1$ Ges $sin\ \theta = 0$ Kv‡RB:

$$\begin{pmatrix} x' \\ y' \end{pmatrix} = \begin{pmatrix} 1 & 0 \\ 0 & 1 \end{pmatrix}\begin{pmatrix} x \\ y \end{pmatrix}$$
$$\begin{pmatrix} x' \\ y' \end{pmatrix} = \begin{pmatrix} x \\ y \end{pmatrix}$$

hvi A_: $x' = x$
$y' = y$

wVK Avgiv †hUv †f‡ewQjvg|

Avgv‡`i GB c‡iv cwikgUK Kivi GKUvB D‡Ïk¨–Avgiv †Zvgv‡`i †evSv‡Z PvB, GKUv †Kv AwW‡bU wm‡÷‡gi mv‡c‡¶ Ab¨ GKUv †Kv AwW‡bU wm‡÷g‡K GKUv wbw`ó †Kv‡Y †Nviv‡bv hvq| KZ †Kv‡Y †Nviv‡bv n‡q‡Q

†mUv hw` Avgiv Rwwb Avgiv PU K‡i †Nviv‡bvi ci Zvi †Kv AwW‡bU KZ n‡e †mUv †ei K‡i †dj‡Z cvie|

Avgiv †h c‡iv e¨vcviwU wVK K‡i K‡iwQ †Kv_vI fj nq wb, †mUv Av‡iv GKfv‡e †`Lv‡bv hvq|

aiv hvK †Mvov‡Z †Kv AwW‡bU wQj (x, y), Gev‡i †Kv AwW‡bU wm÷gUv‡K θ_1 †KvY †Nviv‡bv n‡jv hvi Kvi‡Y Avgiv †cjvg (x', y') Gev‡i (x', y') Gi mv‡c‡¶ θ_2 †KvY †Nviv‡bv n‡jv (16 bs Qwe), hvi Kvi‡Y Avgiv †cjvg (x'', y'')

A_vr
$$\begin{pmatrix} x'' \\ y'' \end{pmatrix} = \begin{pmatrix} \cos\theta_2 & \sin\theta_2 \\ -\sin\theta_2 & \cos\theta_2 \end{pmatrix} \begin{pmatrix} x' \\ y' \end{pmatrix}$$

Ges
$$\begin{pmatrix} x' \\ y' \end{pmatrix} = \begin{pmatrix} \cos\theta_1 & \sin\theta_1 \\ -\sin\theta_1 & \cos\theta_1 \end{pmatrix} \begin{pmatrix} x \\ y \end{pmatrix}$$

c_gwU‡Z wØZxqwU ewm‡q wjL‡Z cvwi:

$$\begin{pmatrix} x'' \\ y'' \end{pmatrix} = \begin{pmatrix} \cos\theta_2 & \sin\theta_2 \\ -\sin\theta_2 & \cos\theta_2 \end{pmatrix} \begin{pmatrix} \cos\theta_1 & \sin\theta_1 \\ -\sin\theta_1 & \cos\theta_1 \end{pmatrix} \begin{pmatrix} x \\ y \end{pmatrix}$$

†hUv‡K †jLvi R‡b¨ Avgiv g¨wU‡·i ¸Y GKevi SvjvB K‡i wbB:

$$\begin{pmatrix} a & b \\ c & d \end{pmatrix} \begin{pmatrix} w & x \\ y & z \end{pmatrix} = \begin{pmatrix} aw+by & ax+bz \\ cw+dy & cx+dz \end{pmatrix}$$

Kv‡RB Avgv‡`i GLv‡b n‡e:

$$\begin{pmatrix} x'' \\ y'' \end{pmatrix} = \begin{pmatrix} \cos\theta_1\cos\theta_2 - \sin\theta_1\sin\theta_2 & \sin\theta_1\cos\theta_2 + \cos\theta_1\sin\theta_2 \\ -\cos\theta_1\sin\theta_2 - \sin\theta_1\cos\theta_2 & \cos\theta_1\cos\theta_2 - \sin\theta_1\sin\theta_2 \end{pmatrix} \begin{pmatrix} x \\ y \end{pmatrix}$$

†mUv‡K Le mn‡RB †jLv hvq:

$$\begin{pmatrix} x'' \\ y'' \end{pmatrix} = \begin{pmatrix} \cos(\theta_1+\theta_2) & \sin(\theta_1+\theta_2) \\ -\sin(\theta_1+\theta_2) & \cos(\theta_1+\theta_2) \end{pmatrix} \begin{pmatrix} x \\ y \end{pmatrix}$$

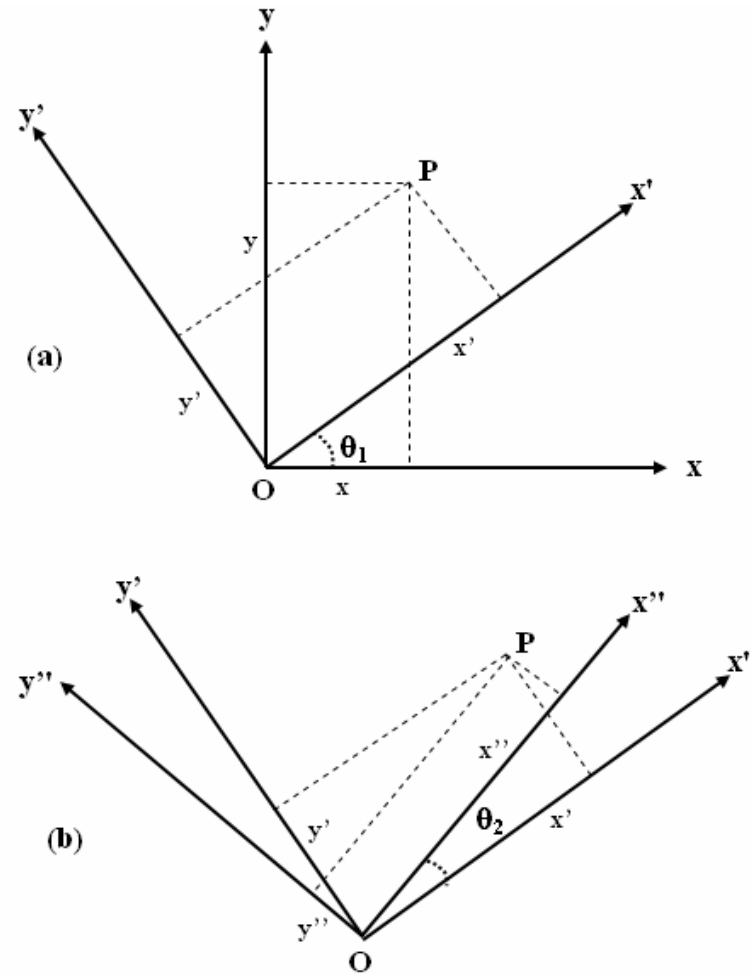

16 bs Qwe: (a) $x:y$ †Kv AwW‡bU wm‡÷gUv‡K θ_1 †KvY †Nviv‡bv n‡jv hvi Kvi‡Y Avgiv †cjvg (x', y') Gev‡i (b) $x':y'$ †Kv AwW‡bU wm‡÷g‡K Gi mv‡c‡¶ θ_2 †KvY †Nviv‡bv n‡jv, hvi Kvi‡Y Avgiv †cjvg (x'', y'')

GwU ej‡Q (x'', y'') n‡"Q. (x, y) †K $(\theta_1 + \theta_2)$ ‡Kv‡b †Nviv‡bvi mgvb| c_gevi θ_1, wØZxqevi Av‡iKU θ_2 †Nviv‡bv n‡j †gvU †Nviv‡bv nq $\theta_1 + \theta_2$ Ges Avgiv †mUvB †c‡qwQ| wVK †hiKg Avgiv Avkv K‡iwQjvg|

g‡b ivL‡Z n‡e Avgiv e¨vcviUv mnR Kivi R‡b¨ ïa `wU gvÎv e¨envi K‡iwQ| c‡iv wÎgwÎK RM‡Z hw` †Nviv‡Z PvB Zv n‡j me¸‡jv g¨wU · 2×1 Ges 2×2 Gi e`‡j n‡e 3×1 wKsev 3×3 g¨wU · |

Avgiv †hUv Ki‡Z PvBwQ †mUv Kivi R‡b¨ Avgv‡`i Avi GKUv welq †`Lv‡Z n‡e| aiv hvK Avgiv GKUv †jvnvi i‡Wi ``N¨ gvc‡Z PvBwQ| Zvi GK gv_v †i‡LwQ O we›`‡Z, Ab¨ gv_v †i‡q‡Q P we›`‡Z| Zv n‡j Zvi ``N¨ n‡e:

$$OP = x^2 + y^2$$

GLb Avgiv hw` Avgv‡`i †Kv AwW‡bU wm‡÷g θ †Kv‡Y Nwi‡q †dwj Zvn‡j †mB †Kv AwW‡bU wm‡÷‡g †jvnvi i‡Wi ``N¨ n‡e:

$$\begin{aligned} OP &= x'^2 + y'^2 \\ &= (x\cos\theta + y\sin\theta)^2 + (-x\sin\theta + y\cos\theta)^2 \\ &= x^2\cos^2\theta + y^2\sin^2\theta + 2xy\cos\theta\sin\theta + x^2\sin^2\theta + y^2\cos^2\theta \\ &\qquad - 2xy\sin\theta\cos\theta \\ &= x^2(\cos^2\theta + \sin^2\theta) + y^2(\sin^2\theta + \cos^2\theta) \\ &= x^2 + y^2 \end{aligned}$$

A_vr Avgiv †h †Kv AwW‡bU wm‡÷‡gB hvB bv †Kb, me mg‡qB †jvnvi i‡Wi ``N¨Uv GKB _vK‡e| Zvi †Kv‡bv cwieZb n‡e bv| nIqvi K_v bqÑ hw` n‡Zv Zv n‡j eo mgm¨v n‡q †hZ!

PZgwÎK RMr

Gev‡i Avgiv †hUv †`Lv‡bvi R‡b¨ GZ cwikg K‡iwQ †mUv K‡i †dwjÑ j‡i›U‡Ri mÎ¸‡jv wj‡L †dwj–KvRUv mnR Kivi R‡b¨ c_‡g wjwL:

$$\gamma = \frac{1}{\sqrt{1-\beta^2}}$$

$$\beta = \frac{v}{c}$$

Zv n‡j j‡i›U‡Ri cwieZb n‡"Q:

$$x' = \gamma x - \gamma\beta ct$$

$$t' = \gamma t - \frac{\gamma\beta x}{c}$$

mevB wbðqB Gev‡i Abgvb K‡i †d‡j‡Q Awg Kx Ki‡Z PvBwQ| GKUv †Kv AwW‡bU wm‡÷‡gi mv‡c‡¶ Avgiv †hiKg Ab¨ GKUv †Kv AwW‡bU wm‡÷g‡K Nwi‡q ``N¨¸‡jvi †fZ‡i m¤úK †ei K‡iwQjvg GLv‡bI ZvB Ki‡Z PvBwQ|

Awg Rwb †KD †KD AvcwË Kivi R‡b¨ c¯Z n‡"Q–Av‡M wQj GKUv we›`i `wU ``N¨, GLb n‡"Q Ae¯vb Ges mgq! wKš GKU ˆah¨ a‡i †`Lv hvK Avm‡jB KvRwU Kiv hvq wK bv| Avgiv hw` Gfv‡e wjwL:

$$x' = \gamma x + (i\gamma\beta)(ict)$$

$$ict' = -i\gamma\beta x + \gamma(ict)$$

†hLv‡b $i = \sqrt{-1}$ ‡mB weL¨vZ imaginary msL¨v|

Zv n‡j g¨wU · e¨envi K‡i †jLv hvq:

$$\begin{pmatrix} x' \\ ict' \end{pmatrix} = \begin{pmatrix} \gamma & i\gamma\beta \\ -i\gamma\beta & \gamma \end{pmatrix} \begin{pmatrix} x \\ ict \end{pmatrix}$$

GUv wK ûeû GKU Av‡Mi Kiv Avgv‡`i †Kv AwW‡bU wm‡÷g †Nviv‡bvi g‡Zv bq? c_‡g wQj $x$ Ges $ict$, Pjgvb †idv‡i‡Ý hvIqv n‡"Q †¯úm UvB‡g GKU Nwi‡q †`qvi g‡Zv| Zvi gv‡b Avgiv †h me mgq wÎgwÎK RMr e‡j G‡mwQ †mwU cwicY bq, Zvi mv‡_ mgqUv‡K †hvM K‡i †`qv †h‡Z cv‡i| †h‡nZ ``N¨ c¯ Avi D"PZv GB wZbUv gvÎv Av‡Q– mgqUv‡K h³ Ki‡Z n‡j †mUv‡K wbðqB ej‡Z n‡e PZ_ gvÎv| Kv‡RB Avgiv ej‡Z cwi Avgv‡`i Pvicv‡ki RMr Avm‡j wÎgwÎK bq GUv–n‡"Q PZgwÎK Ges mgq n‡"Q Zvi PZ_ gvÎv| (†KD †hb g‡b bv K‡i Pvi gvÎv‡ZB GUv‡K †_‡g †h‡Z n‡e–AvIl †ewk gvÎv †h Avm‡e bv †KD ej‡Z cv‡i bv! w÷s w_lwi‡Z Kgc‡¶ `k gvÎvi c‡qvRb- wKš †mUv wfb e¨vcvi|)

j‡i›UR cwieZb‡K Gfv‡e g¨vwU· w`‡q Avm‡jB wjL‡Z cwi wK bv Zvi Rb¨ GKUv eo cix¶v ewK i‡q †M‡Q| Avgiv hLb †Kv AwW‡bU wm‡÷g †Kv‡Y Nwi‡qwQ ZLb †`‡LwQ `B †Kv AwW‡bU wm‡÷‡gB †Kv‡bwKQi ^`N¨ mgvb _v‡K| hw` j‡i›UR i¦cvši‡K Avgiv Gfv‡e wjL‡Z PvB Zv n‡j GLv‡bI †m ai‡Yi wKQ‡K AcwiewZZ _vK‡Z n‡e| Av‡M wQj

$$x'^2 + y'^2 = x^2 + y^2$$

wKš †mUv ¸i"ZcY bq|

Avm‡j hw` mwZ¨ mwZ¨ ^`N¨UvB ej‡Z PvB Zv n‡j †jLv DwPZ:

$$\sqrt{x'^2 + y'^2} = \sqrt{x^2 + y^2}$$

GLv‡bI †mUv mwZ¨ nIqv DwPZ| A_vr PZgwÎK RM‡Zi ^`N¨Uv ` RvqMv‡ZB mgvb n‡Z n‡e| wKš PZgwÎK RM‡Z ‰`N¨Uv wK? wÎgwÎK RM‡Z ^`N¨ wQj `B we›`‡Z Ae¯v‡bi gvSLv‡bi ^`N¨UK| PZgwÎK RM‡Z Ae¯v‡b mgqUv‡KI ivL‡Z n‡e, A_vr GUv n‡"Q bZb ai‡bi Ae¯vb, †Kv_vq Av‡Q Ges KLb Av‡Q GB Z_¨¸‡jv wb‡q GUv ^Zwi c`v_weÁv‡bi fvlvq GUv‡K e‡j event.

Avgiv mg‡qi mv‡_ ic ¸Y K‡i ict ^Zix K‡i †mUv‡K Pvi b¤i gvÎv ^Zix K‡iwQ| GUv‡K gvÎv aiv n‡j `wU event Gi gvSLv‡bi ^`N¨ n‡"Q:

$$\sqrt{x^2 + (ict)^2} = \sqrt{x^2 - (ct)^2}$$

Pjgvb †Kv‡b †idv‡iÝ †d‡g †mB `wU event Gi ^`N¨ n‡e:

$$\sqrt{x'^2 + (ict')^2} = \sqrt{x'^2 - (ct')^2}$$

Kv‡RB Avgv‡`i †`L‡Z n‡e

$$\sqrt{x'^2 - (ct')^2} = \sqrt{x^2 - (ct)^2}$$

KvRUv Le KwVb bq

$$x' = \gamma x + (i\gamma\beta)(ict)$$
$$ict' = -i\gamma\beta x + \gamma(ict)$$

$$x'^2 + (ict')^2 = (\gamma x + (i\gamma\beta)(ict))^2 + (-i\gamma\beta x + \gamma(ict))^2$$
$$= \gamma^2 x^2 + \gamma^2\beta^2 c^2 t^2 - 2(\gamma x)(\gamma\beta ct) - \gamma^2\beta^2 x^2 - \gamma^2 c^2 t^2 + 2(\gamma\beta x)(\gamma ct)$$
$$= \gamma^2 x^2 - \gamma^2\beta^2 x^2 - \gamma^2 c^2 t^2 + \gamma^2\beta^2 c^2 t^2$$
$$= x^2(\gamma^2 - \gamma^2\beta^2) - c^2 t^2(\gamma^2 - \gamma^2\beta^2)$$

wKš Avgiv Rwb $\gamma^2 - \gamma^2\beta^2 = \gamma^2(1-\beta^2) = \dfrac{(1-\beta^2)}{(1-\beta^2)} = 1$

Kv‡RB $x'^2 + (ict')^2 = x^2 - c^2 t^2$

A_vr Avgiv †`L‡Z cw"Q j‡i›U‡Ri cwieZ‡b `‡Uv event Gi gvSLv‡bi `iZUK me †idv‡iÝ †d‡gB mgvb| `i‡Zi ms‡KvPb nq mg‡qi cmviY nq wKš $x^2 - c^2 t^2$ Gi †Kv‡bv cwieZb nq bv|

†e‡Mi †hvMdj

mevi wbðqB gv‡b Av‡Q Avgiv GKU Av‡M GKUv †Kv AwW‡bU wm‡÷g c_gevi θ_1 Ges c‡iievi Zvi mv‡c‡¶ θ_2 Nwi‡qwQjvg| `‡Uv g¨vwU·‡K ¸b K‡i Avgiv †h g¨vwUK †c‡qwQjvg †`Lv †Mj †mUv Avm‡j GKevi $(\theta_1 + \theta_2)$ †Kv‡Y †Nviv‡bv GKUv †Kv AwW‡bU wm‡÷g Qvov Avi wKQ bq|

hLb GKUv †Kv AwW‡bU wm‡÷g ev Bbviwkqvj wm‡÷‡gi Zjbvq Av‡iKUv wm‡÷g v †e‡M hvq ZLb Kx cwieZb nq †mUv Avgiv B‡Zvg‡a¨ †`‡LwQ| hw` wØZxq Bbviwkqvj wm‡÷‡gi Zjbvq ZZxq wm‡÷gwU Av‡iKUv wfb †e‡M mi‡Z _v‡K Zv n‡j Kx cwieZb nq Avgiv †mB GKB Kvq`vq †ei K‡i †dj‡Z cvie| c‡iv e¨vcviUv n‡e g¨vwU‡‡·I ¸Yb!

aiv hvK c_g †Kv AwW‡bU wm‡÷‡gi Zjbvq wØZxq †Kv AwW‡bU wm‡÷g v_1 †e‡M hv‡"Q| A_vr

$$\begin{pmatrix} x' \\ ict' \end{pmatrix} = \begin{pmatrix} \gamma_1 & i\gamma_1\beta_1 \\ -i\gamma_1\beta_1 & \gamma_1 \end{pmatrix} \begin{pmatrix} x \\ ict \end{pmatrix}$$

†hLv‡b

$$\gamma_1 = \frac{1}{\sqrt{1-\beta_1^{\,2}}}$$

$$\beta_1 = \frac{v_1}{c}$$

Gev‡i aiv hvK wØZxqv †Kv AwW‡bU wm‡÷‡gi Zjbvq ZZxq †Kv AwW‡bU wm‡÷g v_2 †e‡M hv‡"Q| A_vr

$$\begin{pmatrix} x'' \\ ict'' \end{pmatrix} = \begin{pmatrix} \gamma_2 & i\gamma_2\beta_2 \\ -i\gamma_2\beta_2 & \gamma_2 \end{pmatrix} \begin{pmatrix} x' \\ ict' \end{pmatrix}$$

†hLv‡b

$$\gamma_2 = \frac{1}{\sqrt{1-\beta_2^{\,2}}}$$

$$\beta_2 = \frac{v_2}{c}$$

Gev‡il c_g g¨wU·Uv wØZxq g¨wU‡· e¨envi K‡i wjL‡Z cvwi:

$$\begin{pmatrix} x'' \\ ict'' \end{pmatrix} = \begin{pmatrix} \gamma_2 & i\gamma_2\beta_2 \\ -i\gamma_2\beta_2 & \gamma_2 \end{pmatrix} \begin{pmatrix} \gamma_1 & i\gamma_1\beta_1 \\ -i\gamma_1\beta_1 & \gamma_1 \end{pmatrix} \begin{pmatrix} x \\ ict \end{pmatrix}$$

$$\begin{pmatrix} x'' \\ ict'' \end{pmatrix} = \begin{pmatrix} \gamma_1\gamma_2 + \gamma_1\gamma_2\beta_1\beta_2 & i\gamma_1\gamma_2\beta_1 + i\gamma_1\gamma_2\beta_2 \\ -i\gamma_1\gamma_2\beta_2 - i\gamma_1\gamma_2\beta_1 & \gamma_1\gamma_2\beta_1\beta_2 + \gamma_1\gamma_2 \end{pmatrix} \begin{pmatrix} x \\ ict \end{pmatrix}$$

$$\begin{pmatrix} x'' \\ ict'' \end{pmatrix} = \begin{pmatrix} \gamma_1\gamma_2(1+\beta_1\beta_2) & i\gamma_1\gamma_2(\beta_1+\beta_2) \\ -i\gamma_1\gamma_2(\beta_1+\beta_2) & \gamma_1\gamma_2(1+\beta_1\beta_2) \end{pmatrix} \begin{pmatrix} x \\ ict \end{pmatrix}$$

hw` ZZxq †Kv AwW‡bU c_g †Kv AwW‡bU wm‡÷‡gi mv‡c‡¶ v †e‡M †hZ A_vr

$$\gamma = \frac{1}{\sqrt{1-\beta^2}}$$

$$\beta = \frac{v}{c}$$

Zvn‡j GB mgxKiYUv Avgiv wjLZvg Gfv‡e:

$$\begin{pmatrix} x'' \\ ict'' \end{pmatrix} = \begin{pmatrix} \gamma & i\gamma\beta \\ -i\gamma\beta & \gamma \end{pmatrix} \begin{pmatrix} x \\ ict \end{pmatrix}$$

Dc‡ii `wU Zjbv K‡i Avgiv †`LwQ:

$$\gamma = \gamma_1\gamma_2(1+\beta_1\beta_2)$$
$$\gamma\beta = \gamma_1\gamma_2(\beta_1+\beta_2)$$

wØZxq mgxKiY‡K c_g mgxKiY w`‡q fvM K‡i Avgiv †`wL

$$\beta = \frac{\beta_1+\beta_2}{1+\beta_1\beta_2}$$

Avgiv †hUv †c‡qwQ †mUv mwVK wK bv cix¶v K‡i †`Lvi Rb¨ β-Gi e¨envi K‡i γ †ei Ki‡Z cvwi| †h‡nZ

$$\gamma = \frac{1}{\sqrt{1-\beta^2}}$$

c_g $1-\beta^2$ †ei Kiv hvK| A_vr

$$1-\beta^2 = 1-\left(\frac{\beta_1+\beta_2}{1+\beta_1\beta_2}\right)^2$$

$$1-\beta^2 = \frac{(1+\beta_1\beta_2)^2-(\beta_1+\beta_2)^2}{(1+\beta_1\beta_2)^2}$$

$$1-\beta^2 = \frac{(1+\beta_1\beta_2)^2-(\beta_1+\beta_2)^2}{(1+\beta_1\beta_2)^2}$$

$$1-\beta^2 = \frac{1+2\beta_1\beta_2+\beta_1{}^2\beta_2{}^2-\beta_1{}^2-2\beta_1\beta_2-\beta_2{}^2}{(1+\beta_1\beta_2)^2}$$

$$1-\beta^2 = \frac{1-\beta_1{}^2-\beta_2{}^2+\beta_1{}^2\beta_2{}^2}{(1+\beta_1\beta_2)^2}$$

$$1-\beta^2 = \frac{(1-\beta_1{}^2)(1-\beta_2{}^2)}{(1+\beta_1\beta_2)^2}$$

$$\gamma = \frac{1}{\sqrt{1-\beta^2}} = \frac{1+\beta_1\beta_2}{\sqrt{(1-\beta_1{}^2)(1-\beta_2{}^2)}}$$

A_vr $\gamma = \gamma_1\gamma_2(1+\beta_1\beta_2)$

γ Gi R‡b¨ GUvB Avgiv Av‡M †c‡qwQ| A_vr Avm‡jB

$$\beta = \frac{\beta_1+\beta_2}{1+\beta_1\beta_2}$$

GUv‡K wjL‡Z cvwi $v = \dfrac{v_1+v_2}{1+\dfrac{v_1v_2}{c^2}}$

hvi A_ v_1 Ges v_2 GB `wU †e‡Mi †hvMdj v_1+v_2 bq, GwU n‡"Q:

$$v = \frac{v_1+v_2}{1+\dfrac{v_1v_2}{c^2}}$$

G Kvi‡Y hZB †Póv Kiv hvK KL‡bvB †eM Av‡jvi †eM †_‡K †ewk n‡e bv| aiv hvK $v_1 = \dfrac{3c}{4}$ Ges $v_2 = \dfrac{3c}{4}$, mvaviY wn‡m‡e `wUi †hvMdj nevi K_v $v_1+v_2 = \dfrac{3c}{2}$ wKš Av‡cw¶K mÎ ej‡Q:

$$v = \frac{3c/4+3c/4}{1+(3c/4)(3c/4)} = \frac{24}{25}c$$

†hUv Av‡jvi †eM c †_‡K Kg|

$v_1 = v$ Ges $v_2 = c$ aiv n‡j Avgiv cve: $v = \dfrac{v+c}{1+\dfrac{v}{c}}$

mevi g‡b Av‡Q wK Avgiv G‡Kev‡i ïi"‡Z ïagvÎ AvBb÷vB‡bi mÎ e¨envi K‡i GwU †ei K‡i †d‡jwQjvg?

†P‡ibKf †iwW‡qkvb

Av‡cw¶K mÎ ev w_lwi Ad wi‡jwUwfwU †kLvi mgq Avgiv evievi GKUv K_v e‡jwQ, †mUv n‡"Q †Kv‡bwKQi MwZ‡eM Av‡jvi MwZ‡eM †_‡K †ewk n‡Z cvi‡e bv| wKš gRvi e¨vcvi n‡"Q Av‡jv †_‡K `"ZMwZ‡Z B‡jKUb Q‡U †h‡Z cv‡i wKš Zv‡Z w_lwi Ad wi‡jwUwfwUi wbqg f½ nq bv, †mUv Kxfv‡e m¤e?

Awg Rwb mevB wbðqB Le `wðšvi gv‡S c‡o †M‡Qv, evievi †Rvi Mjvq e‡jwQ †Kv‡bwKQB Av‡jvi PvB‡Z `"ZMwZ‡Z †h‡Z cvi‡e bv, Avevi ejwQ B‡jKUb bwK w_lwi Ad wi‡jwUwfwU †g‡bB Av‡jvi PvB‡Z `"ZMwZ‡Z †h‡Z cvi‡e! e¨vcviUv Avm‡j Ggb wKQ wewPÎ bq| evievi ejv n‡q‡Q Av‡jvi †eM c n‡"Q

$$c = 2.998\times10^8\ m/s$$

hviv fvj K‡i j¶ K‡i‡Q Zviv wbðqB GUv j¶ K‡i‡Q †h Av‡jvi GB †eM n‡"Q k‡b¨, wKš Av‡jv hw` †Kv‡bv gva¨‡gi †fZi w`‡q hvq Zv n‡j wKš Av‡jvi †eM 2.998×10^8 m/s _v‡K bv, K‡g hvq| Avgiv mevB cwZmviv¼ e‡j GKUv wRwb‡mi bvg ï‡bwQ †mUv Avi wKQB bv, k‡b¨ Av‡jvi †eM Ges †mB gva¨‡g Av‡jvi †e‡Mi fvMdj| A_vr

$$\text{†Kv‡bv gva¨‡gi cwZmvi¼} = \frac{\text{k‡b¨ Av‡jvi †eM}}{\text{†mB gva¨‡g Av‡jvi †eM}}$$

Kv‡RB Avgiv hw` †Kv‡bv gva¨‡gi cwZmvivsK Rwb Zvn‡j †mB gva¨‡g Av‡jvi †eM PU K‡i †ei K‡i †dj‡Z cwi| A_vr:

cwbi cwZmvi¼ 1.33	cwb‡Z Av‡jvi †eM: $2.26\times10^8\ m/s$
Kv‡Pi cwZmvi¼ 1.45	Kv‡P Av‡jvi †eM: $2.00\times10^8\ m/s$

Kv‡RB cwbi †fZi Av‡jvi †eM n‡"Q $2.26\times10^8\ m/s$ A_vr Av‡jv Gi PvB‡Z †ewk †e‡M †h‡Z cvi‡e bv| wKš GKUv B‡j±‡bi Gi PvB‡Z †ewki †e‡M †h‡Z †Kv‡bv evav †bBÑ hZ¶Y chš B‡jKUb c †_‡K †ewk †e‡M hv‡"Q bv w_lwi Ad wi‡jwUwfwUi †Kv‡bv mgm¨v n‡"Q bv!

†P‡ibKf †iwW‡qkvb Le wewPÎ wKQ bq, Le mn‡RB GUv †Pv‡L c‡o| hviv cwb w`‡q wbqšY Kiv wbDwKqvi wi G±i †`‡L‡Q Zviv †mLv‡b †h Ace bxjvf Av‡jv †`‡L‡Q †mUvB †P‡ibKf †iwW‡qkvb| `"Z MwZ‡Z Q‡U hvIqv PvRW KYv †_‡K †mUv †ei nq, KYwU Av‡jv †_‡K `"Z MwZ‡Z hvq e‡j †mUv A‡bKUv b`x‡Z Q‡U hvIqv jÂ wKsev Ujv‡ii †XD‡qi gZb| cwb‡Z †h †XD ˆZwi nq Zvi MwZ Le Kg, GKUv jÂ ev Ujvi mn‡RB Zvi †_‡K `"Z †h‡Z cv‡i| ZvB b`x‡Z Q‡U hvIqv jÂ ev Ujv‡ii †XD‡qi GKUv we‡kl aiY †_‡K| †P‡ibKf †iwW‡qkv‡bi aiYUvI GKB iKg (17 bs Qwe), K‡Zv wWMx †Kv‡Y GB Av‡jv †ei n‡q Av‡m †mLvb †_‡K Avm‡j PvRW KYvi MwZ‡eM †ei Kiv nq|

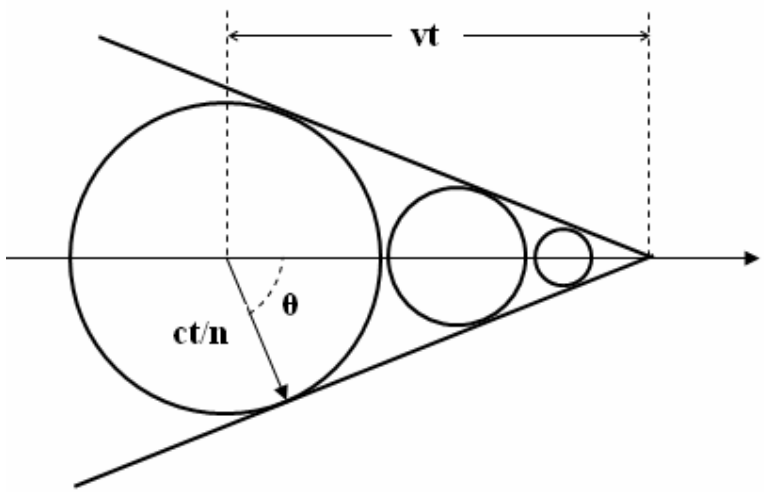

17 bs Qwe: †P‡ibKf †iwW‡qkv‡b K‡Zv wWMx †Kv‡Y *(θ)* GB Av‡jv †ei n‡q Av‡m †mLvb †_‡K Avm‡j PvRW KYvi MwZ‡eM *(v)* †ei Kiv nq|

lqvì jvBb

Avgv‡`i ``bw›`b Rxe‡b †Kv‡bv GKUv we›`‡K wbw`ó Kivi Rb¨ Avgv‡`i wZbwU `i‡Zi ``N¨ w`‡Z nq †mUv Av‡MB e‡jwQ| w_lwi Ad wi‡jwUwfwU wkL‡Z wM‡q Avgiv Awe®‹vi K‡iwQ wÎgwÎK RM‡Zi wZbwU ``N¨ w`‡qB GKUv we›`‡K wbw`ó Kiv h‡_ó bq| wÎgwÎK RM‡Zi wZbwU ``‡N¨i mv‡_ mv‡_ mgq‡KI wbw`ó K‡i w`‡Z nq| Ab¨ A‡_ mgq n‡"Q PZ_ gvÎv Ges GB cwiwPZ RMrUv PZgwÎK RMr! Avgiv Av‡iv e‡jwQjvg †Kv AwW‡bU wm‡÷g †hfv‡eB †Nviv‡bv †nvK GKUv wRwb‡mi ``N¨ mgvb _v‡K| wVK †miKg PZgwÎK RM‡ZI †Kv‡bv GKai‡bi ``N¨ mgvb _v‡K|

wÎgwÎK ``N¨ Avgiv wjLZvg Gfv‡e:

$$L = \sqrt{x^2 + y^2 + z^2}$$

PZgwÎK RM‡Zi ``N¨Uv Ab¨iKg, †mLv‡b wQj $x, y, z$ Ges $ict$ Kv‡RB PZgwÎK RM‡Zi ``N¨ S n‡"Q,

$$S = \sqrt{x^2 + y^2 + z^2 - c^2t^2}$$

†hUv Le¸i“ZcY †mUv n‡”Q GLv‡b x^2, y^2 Ges z^2 cwRwUf wKš c^2t^2 wb‡MwUf hvi A_ wÎgwÎK RM‡Z hvi GKUv ``N¨ Av‡Q PZgwÎK RM‡Z Zvi ``N¨ ÒoÓ n‡Z cv‡i–A_vr hvi †Kv‡bv ‰`N¨B †bB!

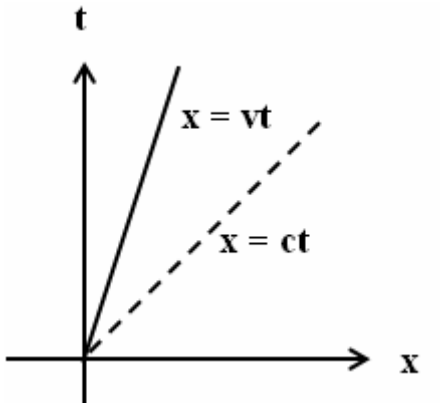

18 bs Qwe: †P‡ibKf †iwW‡qkv‡b K‡Zv wWMx †Kv‡Y (θ) GB Av‡jv †ei n‡q Av‡m †mLvb †_‡K Avm‡j PvRW KYvi MwZ‡eM (v) †ei Kiv nq|

Avgiv †Kv AwW‡bU R¨wgwZ Kivi mgq x Ges y A‡¶ ``N¨ we‡ePbv K‡iwQ| Av‡cw¶K mÎ Ki‡Z n‡j x Ges y †_‡K A‡bK †ewk PgKc` n‡e Ges x Ges ict we‡ePbv Kiv| Qwe‡Z GiKg `wU A¶ AvKv n‡q‡Q| †Kv‡bv e¯ hw` mg‡qi mv‡_ ¯vb cwieZb K‡i Zv n‡j †mUv $x = vt$ ‡iLv w`‡q †`Lv‡bv hv‡e| MwZ‡eM hZ evo‡Z _vK‡e †Kv‡Yi gvb evo‡Z _vK‡e, Ges me‡P‡q †ewk †eM $v = c$ n‡q †M‡j (Av‡jvi †ejvq) †mwU 45° †KvY n‡q hv‡e| †h‡nZ †Kv‡bvwKQi MwZ‡eMB c †_‡K †ewk n‡Z cv‡i bv ZvB Gi PvB‡Z †ewk †Kv‡bv †KvY †iLv nIqv m¤¢e bq| Avgiv B‡”Q Ki‡j c‡iv e¨vcviwU wb‡MwUf x Ges wb‡MwUf t Gi R‡b¨I evov‡Z cwi Ges †mUv 19 bs Qwei g‡Zv †`Lv‡e| GLv‡b $x = 0, t = 0$ n‡”Q eZgvb gnZ, Ic‡ii AskwU n‡”Q fwel¨r Ges wb‡Pi AskwU n‡”Q AZxZ| Qwe‡Z †`Lv‡bv $x = 0$, $t = 0$ we›` ev eZgvb gn‡Z hw` †KD _v‡K Zv n‡j Zvi mv‡_ $x = ct$ Ges

$x = -ct$ †iLv`wU w`‡q Ave× AZxZ †_‡K †KD Zvi mv‡_ †hvMv‡hvM Ki‡Z cvi‡e| GKBfv‡e ejv hvq GB gn‡Z ($x = 0, t = 0$ we›`‡Z) †h Av‡Q †m $x = ct$ Ges $x = -ct$ †iLv w`‡q Ave× fwel¨‡ZB †h‡Z cvi‡e| wekeþv‡Ê Gi evB‡ii †Kv‡bv RvqMv †_‡K †KD Zvi mv‡_ †hvMv‡hvM Ki‡Z cvi‡e bv Ges †ml Kv‡iv mv‡_ †hvMv‡hvM Ki‡Z cvi‡e bv| 19 bs Qwe‡Z †Kv‡bv GKUv e¯i AZxZ †_‡K eZgvb n‡q fwel¨‡Z hvevi welqwU †`Lv‡bv n‡q‡Q| Av‡cw¶K m‡Îi fvlvq GUv‡K ejv nq Iqvì jvBb|

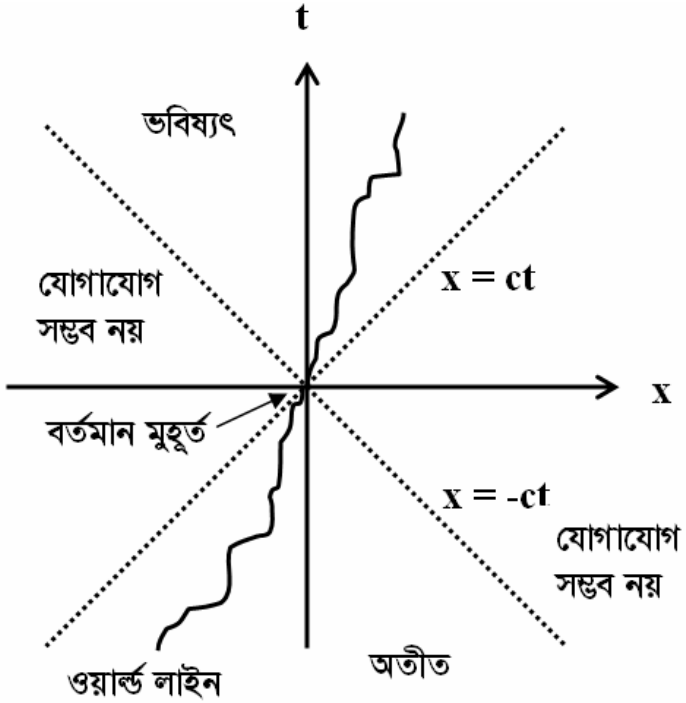

19 bs Qwe: eZgv‡bi mv‡c‡¶ AZxZ Ges fwel¨r

UBb c¨viwW·

w_lwi Ad wi‡jwUwfwU †kLvi mgq Av‡M †nvK c‡i †nvK memg‡qB UBb c¨viwW‡·i e¨vcviwU D‡V Av‡m| Kv‡RB Avgv‡`il †mwU GKevi †`Lv DwPr|

cw_exi †Kv_vI `Rb hgR fvB †evb _v‡K| Zv‡`i eqm hLb wek ermi ZLb Zv‡`i †evb GKUv i‡K‡U K‡i gnvKvk åg‡Y †ei n‡jv| 0.995*c* †e‡M †m wZb eQi gnvKv‡k Q‡U †M‡jv, Zvici i‡KUUv Nwi‡q Avevi 0.995*c* †e‡M cw_ex‡Z wd‡i Gj| cw_ex‡Z †i‡L hvIqv Zvi fvB Gi eqm †e‡o KZ n‡q‡Q?

ckUv mv`vgvUv, Avgiv Rwb w¯i Ae¯v‡bi Zjbvq MwZkxj †Kv‡bwKQ‡Z mg‡qi cmviY nq| A_vr cw_ex‡Z _vKv fvB‡qi AwZµvš mgq hw` *t* Ges i‡K‡U _vKv hgR fvB †ev‡biGi AwZµvš mgq hw` t_0 nq Zvn‡j Avgiv wjL‡Z cwi:

$$t = \frac{t_0}{\sqrt{1-\frac{v^2}{c^2}}}$$

A_vr

$$t = \frac{3}{\sqrt{1-\frac{(0.995)^2}{c^2}}} = 30\,years$$

wVK †miKg wd‡i Avmvi mg‡qI GKB e¨vcvi| A_vr $t_0 = 3$ eQi n‡j $t = 30$ eQi|

Kv‡RB i‡K‡U K‡i †h †evbwU hv‡"Q Zvi AwZµvš mgq hLb 3 + 3 = 6 years, †h fvB cw_ex‡Z Av‡Q Zvi Kv‡Q g‡b n‡e AwZµvš mgq n‡"Q 30 + 30 = 60 years. A_vr i‡K‡U K‡i hgR †evb cw_ex‡Z 6 eQi ci wd‡i G‡m †`L‡e Zvi eqm *20* †_‡K †e‡o n‡q‡Q *26,* wKš cw_ex‡Z †i‡L hvIqv Zvi fvB Gi eqm †e‡o n‡q‡Q *20 + 60 = 80* eQi, GKRb _i_‡i e‡ov|

GZ¶Y †hUK ejv n‡q‡Q †KD wK Zvi †_‡K †Kv‡bv mgm¨v ev weåwš †c‡q‡Q? hw` bv †c‡q _v‡K Zv n‡j e‡j †`wL‡q †`qv hvK|

cw_ex‡Z _vKv hgR fvB‡qi mv‡c‡¶ i‡K‡Ui MwZ‡eM *0.995c* wQj e‡j Avgiv e‡jwQ mg‡qi cmviY n‡q‡Q, A_vr i‡K‡U e‡m _vKv hgR †ev‡bi hLb 3 ermi cvi n‡q‡Q ZLb cw_ex‡Z cvi n‡q‡Q n‡q‡Q *30* ermi| wKš †eM †Zv Av‡cw¶K, Avgiv hw` ejZvg, i‡K‡Ui mv‡c‡¶ cw_ex 0.995*c* †e‡M (D‡ëvw`‡K) hv‡"Q Zv n‡j we›`gvÎ fj n‡Zv bv! hvi A_ i‡K‡U †h e‡m Av‡Q †m ej‡Zv cw_ex‡Z mg‡qi cmviY n‡q‡Q! A_vr cw_ex‡Z hLb wZb eQi AwZµvš n‡q‡Q i‡K‡U ZLb AwZµvš n‡q‡Q 30

ermi| Gfv‡e Av‡iv wZb ermi ci hLb cw_ex‡Z Av‡iv 3 ermi cvi n‡q‡Q ZLb i‡K‡U AwZµvš n‡Zv Av‡iv 30 ermi, Kv‡RB hLb i‡K‡U e‡m _vKv hgR †ev‡bi mv‡_ cw_exi fvB‡qi †`Lv n‡Zv ZLb †`Lv †hZ i‡K‡U K‡i †h G‡m‡Q Zvi eqm †e‡o‡Q *60* ermi, †m n‡q‡Q _i_‡i *80* eQ‡ii ewo! cw_exi †h i‡q †M‡Q Zvi eqm †e‡o‡Q gvÎ *6* Ges Zvi eqm GLb *26*! †KvbUv mwZ¨?

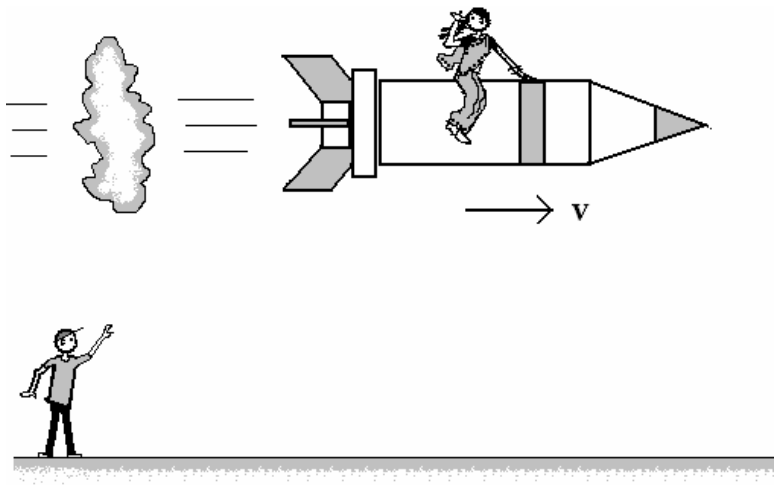

20 bs Qwe: hgR fvB‡K cw_ex‡Z †i‡L †evb GKUv i‡K‡U K‡i gnvKvk åg‡Y †ei n‡jv

GUv‡K ejv nq UBb c¨vivW· ev hgR weåwš| mwZ¨ K_v ej‡Z wK GUv Avm‡j weåwš bq| †h welqUvi mwVK DËi †bB †mUv n‡"Q weåwš| (†hgb †KD hw` e‡j ÒAwg wg_¨v K_v ejwQÓ Ges ZLb hw` wR‡Ám Kiv nq †m wK Avm‡j wg_¨v K_v ej‡Q–†mUv n‡"Q weåwš! KviY Gi mwVK DËi †bB, DËi `‡UvB n‡Z cv‡i!) wKš GB UBb c¨vivW‡·i weÁvbm¤§Z DËi i‡q‡Q| ZvB Gi gv‡S †Kv‡bv weåwš †bB| ejv †h‡Z cv‡i, Awg GKU weåwši Rb¥ w`‡qwQ–Ab¨vqfv‡eB!

cw_ex‡Z _vKv GKRb‡K w¯i a‡i Zvi Zjbvq i‡K‡U K‡i hvIqv Avi i‡KU‡K w¯i a‡i cw_ex‡K MwZkxj a‡i †bqv wKš neû GK e¨vcvi bq| i‡K‡U K‡i †h hw"Qj Zv‡K wZb eQi c‡i i‡K‡Ui w`K cwieZb K‡i Avevi wd‡i Avm‡Z n‡q‡Q| †h cw_ex‡Z wQj Zv‡K wKQB Ki‡Z nq

wbÑKv‡RB Awg hLb e‡jwQ i‡K‡U _vKv Ges cw_ex‡Z _vKv GKB e¨vcvi, KviY GKR‡bi mv‡c‡¶ A‡b¨ 0.995 *c* †e‡M hv‡"Q K_vUv mwZ¨ bq! `wU wfb e¨vcvi Ges †m Kvi‡Y hLb `R‡bi Avevi †`Lv n‡e ZLb GKR‡bi eqm evo‡e gvÎ 6 Ab¨R‡bi evo‡e 60!

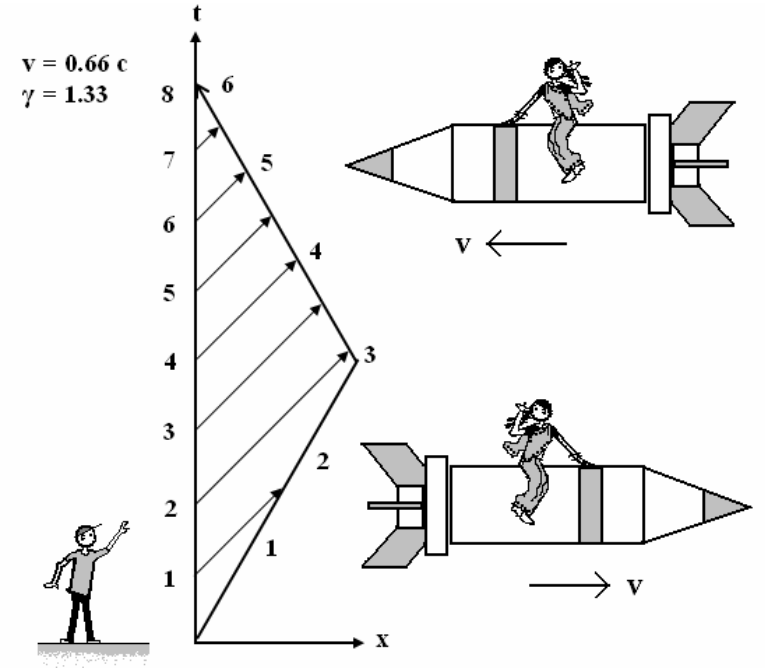

21 bs Qwe: cw_exi fvB GK eQi ci ci GKUv K‡i Av‡jvi wmMbvj i‡K‡Ui D‡Ï‡k cvVv‡"Q, i‡K‡Ui †evb GiKg AvUwU wmMbvj †c‡q‡Q|

welqUv †Kgb K‡i nq †mUv †`Lvi R‡b¨ 21 bs QweUv †`Lv †h‡Z cv‡i| welqUv mnR Kivi R‡b¨ GB Qwe‡Z i‡K‡Ui †eM 0.955*c* bv a‡i n‡q‡Q 0.66*c* hvi Kvi‡Y i‡K‡Ui hvÎxi hLb 6 (Qq) eQi mgq cvi n‡q‡Q ZLb cw_exi hgR fvB‡qi cvi n‡q‡Q 8 (AvU) eQi| Qwe‡Z †`Lv‡bv n‡q‡Q cw_exi fvB GK eQi ci ci GKUv K‡i Av‡jvi wmMbvj i‡K‡Ui D‡Ï‡k cvVv‡"Q, wVK †miKg i‡K‡Ui †evbwUI GK eQi ci ci GKUv wmMbvj cw_exi D‡Ï‡k cvVv‡"Q|

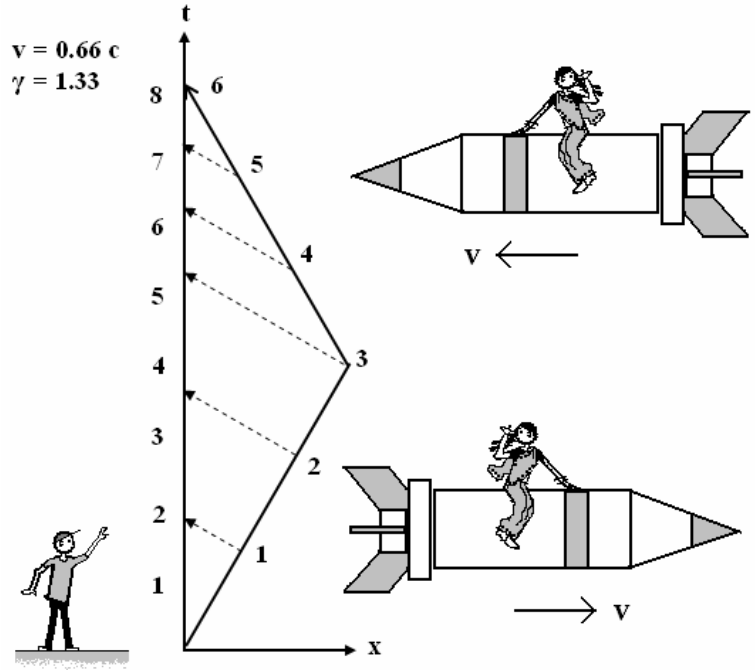

22 bs Qwe: i‡KU †_‡K †evb cwZ eQi GKUv K‡i Av‡jvi wmMbvj cwV‡h‡Q| cw_exi fvB †miKg wmMbvj †c‡q‡Q gvÎ QqwU|

22 bs Qwe‡Z Avgiv †`LwQ i‡K‡Ui †evb c_g wZb eQ‡i cw_ex †_‡K Zvi fvB‡qi cvVv‡bv gvÎ GKwU wmMbvj †c‡q‡Q, c‡ii wZb eQ‡ii †fZi ewK mvZwU wmMbvj †c‡q‡Q| †evb †c‡q‡Q AvUwU wmMbvj KviY cw_ex‡Z fvB‡qi †K‡U‡Q AvU eQi - cw_exi fvB wKš i‡K‡Ui †evb †Z‡K †c‡q‡Q gvÎ QqwU wmMbvj KviY †mLv‡b †K‡U‡Q Qq eQi| cw_exi fvBwU c_g mvZ eQ‡ii †fZi c_g wZbwU wmMbvj †c‡q‡Q| wKš ewK wZbwU †c‡q‡Q †kl GK eQ‡ii †fZi!

KlK Ges LwU

w_lwi Ad wi‡jwUwfwUi Av‡iKUv gRvi mgm¨v n‡”Q KlK Ges j¤v LwUi mgm¨v| aiv hvK GKRb KlK Zvi 100 *m* j¤v Lvgviewwoi mvg‡b `wo‡q Av‡Q| nVvr ZwK‡q †`Lj GKRb gvbl 200 *m* j¤v GKUv LwU wb‡q 0.866*c* †e‡M Q‡U Avm‡Q (23 bs Qwe)|

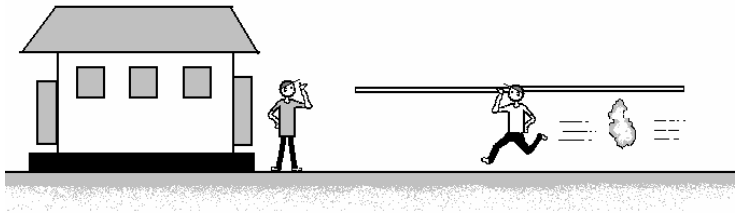

23 bs Qwe: GKRb KlK Zvi 100 *m* j¤v Lvgviewwoi mvg‡b `wo‡q Av‡Q Ges GKRb gvbl 200 *m* j¤v GKUv LwU wb‡q 0.866 *c* †e‡M Q‡U Avm‡Q|

KlK `“Z j‡i›U‡Ri ^`N¨ ms‡KvP‡bi wn‡me K‡i †`Lj LwUUv msKwPZ n‡q †M‡Q Ges Zvi Kv‡Q g‡b nq LwUUvi ^`N¨ n‡”Q:

$$L = 200\sqrt{1-\frac{v^2}{c^2}} = 200\sqrt{1-\left(\frac{0.866c}{c}\right)^2} = 100m$$

Kv‡RB Zvi g‡b n‡jv †m c‡iv LwUUv Zvi Lvgv‡ii †fZi AwU‡q †dj‡Z cvi‡e! hLb LwUUv c‡ivcwi Lvgv‡ii †fZi X‡K‡Q ZLb †m `B cv‡ki `iRv gn‡Zi R‡b¨ eÜ K‡i w`j| Kv‡RB G‡Kev‡i gn‡Zi R‡b¨ n‡jl †m c‡iv LwUUv Lvgv‡ii †fZi ivL‡Z †c‡i‡Q †mUv wPšv K‡i Zvi fwi Avb›` n‡jv!

Z‡e KlK Zvi Lvgviewwoi `iRvUv wb‡qI wPšvq wQj ZvB LwUi av°vq `iRv †f‡O bv hvq †mB f‡q gn‡Zi Rb¨ `iRv eÜ K‡i `iRvUv Avevi L‡j w`j †hb †`ŠoevR gvblUv LwU wb‡q †ei n‡q †h‡Z cv‡i|

Gev‡i LwU nv‡Z †`Š‡o hvIqv gvblUvi Kv‡Q hvIqv hvK| Zvi Kv‡Q g‡b n‡e †h w¯i Ges LvgviewwoUvB ewS 0.866*c* †e‡M Zvi w`‡K Q‡U Avm‡Q| ZvB 100*m* j¤v Lvgvi evoxUvi ^`N¨ Zvi Kv‡Q g‡b n‡e gvÎ 50 *m* KviY,

$$L = 100\sqrt{1-\frac{v^2}{c^2}} = 100\sqrt{1-\left(\frac{0.866c}{c}\right)^2} = 50m$$

gvblwU‡K Rv‡b Zvi nv‡Zi LwUi ^`N¨ 200*m* j¤v, Kv‡RB †m Rv‡b GUv †Kv‡bvfv‡eB 50*m* j¤v GKUv Lvgviewwo‡Z AvUv‡bv hv‡e bv| wKš Avgiv †`‡LwQ KlK gn‡Zi R‡b¨ n‡jl Lvgviewwo‡Z LwUUv‡K eÜ eÜ K‡iwQj| Kxfv‡e m¤e? †K wVK ej‡Q? Avm‡j Kx N‡UwQj?

w_lwi Ad wi‡jwUwfwU e‡j `R‡bB mwVK| KlK mwZ¨ mwZ¨ LwUUv‡K gn‡Ëi R‡b¨ Lvgv‡ii †fZi eÜ K‡iwQj|

†h-gvblwU LwU wb‡q Q‡U hw”Qj †m GKUv wewPÎ `k¨ †`‡LwQj! Kl‡Ki Kv‡Q †hUv GK mgq Zvi Kv‡Q †mUv GK mgq bq, †mUv wfb mgq| †m †`‡L‡Q LwUUvi mvg‡bi fvM hLb wVK Lvgviewwo †fZi w`‡q wM‡q Ab¨ cv‡ki `iRvi mvg‡b nwRi n‡q‡Q| KlK ZLb `iRvUv gn‡Zi Rb¨ eÜ K‡i Avevi L‡j w`‡q‡Q †hb LwUUv †Kv_vI bv av°v Lvq| Lvgviewwo †h LwUUvi wcQ‡bi Ask hLb †cŠ‡Q‡Q ZLb Avevi †mB `iRvUv eÜ K‡i L‡j †`qv n‡q‡Q| †h-gvblwU LwU wb‡q Q‡U hv‡”Q †m wbðqB AevK n‡q fvewQj KlK Kx Ki‡Q?

j‡i›U‡Ri i¦cvši w`‡q Avgiv ej‡Z cwi LwU nv‡Zi gvb‡li mv‡c‡¶ `wU `iRv eÜ nevi mgq n‡”Q

$$t_1' = \frac{t_1 + vx_1/c^2}{\sqrt{1-\frac{v^2}{c^2}}}$$

$$t_2' = \frac{t_2 + vx_2/c^2}{\sqrt{1-\frac{v^2}{c^2}}}$$

Kv‡RB `wU `iRv eÜ Kivi gv‡S mgq n‡”Q

$$t_1' - t_2' = \frac{\frac{v(x_1 - x_2)}{c^2}}{\sqrt{1-\frac{v^2}{c^2}}} = 2(\frac{v}{c})(\frac{100}{c})$$

$$t_1' - t_2' = 2(0.866)(\frac{100}{c}) = \frac{173.2}{c} = 5.77\,ns$$

kw³ I fi‡eM

Avgiv w_lwi Ad wi‡jwUwfwUi cvq me¸‡jv ¸i“ZcY mÎB †ei K‡i †d‡jwQ| †h‡nZ me¸‡jvB K‡iwQ kw³ Avi fi‡e‡Mi gv‡Si mÎwU Avi ewwK _vK‡e †Kb? †mUvI †ei K‡i †djv hvK| hw` fi †eM‡K ewj p Zv n‡j

$$p = \frac{mv}{\sqrt{1-\frac{v^2}{c^2}}}$$

$$pc = \frac{mvc}{\sqrt{1-\frac{v^2}{c^2}}}$$

$$p^2c^2 = \frac{m^2v^2c^2}{1-\frac{v^2}{c^2}}$$

Wvbw`‡K Dc‡i m^2c^4 †hvM Ges we‡qvM K‡i:

$$p^2c^2 = \frac{m^2c^4 - m^2c^4 + m^2v^2c^2}{1-\frac{v^2}{c^2}}$$

$$p^2c^2 = \frac{m^2c^4}{1-\frac{v^2}{c^2}} - \frac{m^2c^4(1-\frac{v^2}{c^2})}{1-\frac{v^2}{c^2}}$$

$$p^2c^2 = E^2 - m^2c^4$$

wKsev: $$E = \sqrt{p^2 + m^2c^4}$$

GB mÎwU kw³ E Gi mv‡_ fi‡eM p Gi m¤úKwU †`Lvq| hw` finxb †Kv‡bv KYv _v‡K, ($m = 0$) Zvn‡j Zvi R‡b¨ Avgiv cvB

$$E = pc$$

Avgiv hw` ejZvg fi‡eM $p = mv$ Zvn‡j hw` $m = 0$ nq Zvn‡j $p = 0$ n‡q hv‡e| wKš w_lwi Ad wi‡jwUwfwUi Kvi‡Y $m = 0$ nevi cil $E = 0$ bv n‡j Zvi fi‡eM _vK‡Z cv‡i Ges †mUv n‡”Q $p = E/c$

†hUv me mg‡qB mwZ¨! Av‡jv Zvi eo cgvb|

ck Ges DËi

1. GKUv i‡K‡Ui ``N¨ $100m$, hLb GUv D‡o hv‡"Q ZLb †Zvgvi g‡b nj GUvi ``N¨ $99m$, i‡K‡UUv KZ †e‡M D‡o hv‡"Q?

DËi: i‡KUUv‡K Zvi cKZ ``N¨ †_‡K msKwPZ g‡b n‡e| j‡i›UR ms‡KvPb Abhvqx †jLv hvq

$$99m = 100\sqrt{1-\frac{v^2}{c^2}}m$$

A_vr: $$\sqrt{1-\frac{v^2}{c^2}} = \frac{99}{100}$$

A_ev, $$1-\frac{v^2}{c^2} = \left(\frac{99}{100}\right)^2$$

$$\frac{v^2}{c^2} = 1-\left(\frac{99}{100}\right)^2$$

$$v = c\sqrt{1-\left(\frac{99}{100}\right)^2} = 0.141c$$

A_vr, i‡KUUv Av‡jvi 0.141 †e‡M hv‡"Q| wbLZfv‡e ej‡j ej‡Z nq: $v = 0.421\times10^8\ m/s$

2. GKUv i‡KU $0.98c$ †e‡M cw_ex †_‡K ilbv w`‡q‡Q| cw_ex‡Z _vKv GKRb gvb‡li mgq Abhvqx i‡K‡Ui GKUv Nwoi wgwb‡Ui KvUv KZ¶‡Y c‡iv GKevi N‡i Avm‡e?

DËi: cw_exi Zjbvq i‡K‡U mg‡qi cmviY NU‡e, Kv‡RB Nwoi wgwb‡Ui KvUv GKevi N‡i Avm‡e, A_vr GK NÈvq †mUv cmwiZ n‡q n‡e:

$$t = \frac{1}{\sqrt{1-\frac{v^2}{c^2}}} = \frac{1}{\sqrt{1-(\frac{0.98c}{c})^2}} = 5.02hours$$

3. GKUv i‡KU cw_ex †_‡K $300m/s$ †e‡M ilbv w`‡q‡Q| KZ eQi ci cw_exi Nwo Ges i‡K‡Ui Nwoi mg‡qi gv‡S cv_K¨ n‡e $1\ s$

DËi: cw_ex‡Z hLb t mgq AwZµvš n‡q‡Q aiv hvK i‡K‡U ZLb t' mgq AwZµvš n‡q‡Q, Ges Av‡cw¶K m‡Îi mg‡qi cmvi‡Yi e¨envi K‡i Avgiv wjL‡Z cwi:

$$t' = \frac{t}{\sqrt{1-\left(\frac{v}{c}\right)^2}}$$

GLv‡b v gvÎ $300\ m/s$ Kv‡RB $\left(\frac{v}{c}\right)^2$ LeB †QvU msL¨v| G Kvi‡Y †Kv‡bv eo f j bv K‡iB Avgiv evB‡bwgqvj G·cvbmvb Ki‡Z cwi| A_vr wjL‡Z cwi

$$(1+x)^n = 1+nx+\frac{n(n+1)}{2}x^2+.....$$

Avgv‡`i †¶‡Î $x = \left(\frac{v}{c}\right)^2, n = -\frac{1}{2}$

A_vr, $$\frac{1}{\sqrt{1-\left(\frac{v}{c}\right)^2}} \cong 1+\frac{1}{2}\left(\frac{v}{c}\right)^2$$

$$= 1 + \frac{1}{2}\left(\frac{v}{c}\right)^2$$

Gi c‡ii msL¨v¸‡jv G‡Zv †QvU †h Avgv‡`i †bqvi c‡qvRb †bB| Kv‡RB:

$$t' = t\left(1 + \frac{1}{2}\left(\frac{v}{c}\right)^2\right)$$

$$t' - t = \frac{1}{2}\left(\frac{v}{c}\right)^2 t$$

GLv‡b ($t - t'$) hw` 1 †m‡KÛ nq Zvn‡j

$$1 = \frac{1}{2}\left(\frac{v}{c}\right)^2 t$$

A_vr, $t = 2(\frac{c}{v})^2 \sec$

$$t = 2\left(\frac{3\times10^8}{3\times10^2}\right)^2 = 2\times10^{12}\, s$$

GK eQi mgvb $\pi \times 10^7 s$ (GLv‡b π-Gi †Kv‡bv ¸i"Z †bB, NUbvµ‡g GwU π Gi KvQvKwQ, ZvB Gfv‡e wjL‡j g‡b ivLvi R‡b¨ Le mwe‡a!)

$$t = \frac{2\times10^{12}}{3.14\times10^7} = 6.36\times10^4\, year$$

wKsev 63 nvRvi eQi!

4. †Kv‡bv GKwU KYvi ¯wqZ $10^{-7} s$, hLb GwU w¯i Ae¯vq _v‡K| Gi MwZ‡eM hw` 0.99 c nq Zv n‡j KYwU Zvi RxeÏkvq KZUK †h‡Z cv‡i?

DËi: w¯i Ae¯vq _vKv GKR‡bi Kv‡Q g‡b n‡e KYwUi mg‡qi cmviY n‡q‡Q, ZvB Gi RxeÏkv †e‡o †M‡Q| Kv‡RB Zvi ¯wqZKvj g‡b n‡e:

$$t = \frac{10^{-7}}{\sqrt{1-\frac{v^2}{c^2}}} s = \frac{10^{-7}}{\sqrt{1-(0.99)^2}} = 7.09\times10^{-7} s$$

Kv‡RB KYwUi AwZµvš `iZ S n‡e:

$S = vt$

$= (0.99c) \times (7.09 \times 10^{-7})\, m$

$= (0.99 \times 2.99 \times 10^8)\ (7.09 \times 10^{-7})\, m$

$= 2.098 \times 10^2\, m$

A_vr AvbgwbK 210 m.

5. GKRb gvbl †`L‡Q wecixZ w`K †_‡K `wU gnvKvkhvb Zvi w`‡K Avm‡Q| GKUvi MwZ‡eM 0.8 c Ab¨Uvi MwZ‡eM 0.9 c, GKwU gnvKvkhv‡bi hvÎxi Kv‡Q Ab¨wUi MwZ‡eM KZ g‡b n‡e?

DËi: Avgv‡`i ‰`bw›`b †e‡Mi wn‡m‡e, Av‡cw¶K MwZ nIqvi K_v $0.9c + 0.8c = 1.7c$, wKš Avgiv Rwb hLb MwZ‡K Av‡jvi †e‡Mi KvQvKwQ n‡q hvq ZLb †eM Gfv‡e †hvM K‡i †djv hvq bv| GKwU †eM $v_1$ Ab¨wU $v_2$ n‡j Zv‡`i Av‡cw¶K †eM v n‡e:

$$v = \frac{v_1 + v_2}{1 + \frac{v_1}{c}\frac{v_2}{c}} = \frac{(0.9+0.8)c}{1+0.9\times0.8} = 0.988c$$

6. †Kv‡bv GKRb gvbl GKwU j¨ve‡iUwii mv‡c‡¶ $+x$ w`‡K $2.9 \times 10^8\ m/s$ ‡e‡M hv‡"Q| gvblwUi Kv‡Q g‡b n‡jv Zvi mv‡c‡¶ $-x$ w`‡K wØZxq GKRb $2.988 \times 10^8\ m/s$ †e‡M hv‡"Q| j¨ve‡iUwii mv‡c‡¶ wØZxq gvblwUi †eM KZ?

DËi: aiv hvK j¨ve‡iUwii mv‡c‡¶ GLb gvblwUi †eM v_1 , wØZxq gvblwU †eM v_2 Ges c_g gvblwUi mv‡c‡¶ wØZxq gvblwU †eM v A_vr

$$v = \frac{v_1 + v_2}{1 + \frac{v_1}{c}\frac{v_2}{c}}$$

†hLv‡b $v_1 = 2.9 \times 10^8\ m/s$, $v_2 = 2.988 \times 10^8\ m/s$ Avgiv Avgv‡`i mgm¨v¸‡jv mgvavb Kivi R‡b¨ `kwg‡Ki ci `B Ni wb‡qwQ| GLv‡b †h‡nZ $v$ Gi gvb `kwg‡Ki ci wZb Ni †`qv n‡q‡Q ZvB me RvqMv‡ZB `kwg‡Ki ci wZb Ni wb‡Z n‡e| Avgiv mvaviYZ $c = 3.00 \times 10^8\ m/s$ e¨envi Kwi, GB mgm¨wUi R‡b¨ `kwg‡Ki c‡i wZb Ni A_vr 2.998 e¨envi Kie| Kv‡RB:

$$v_1 = 2.900 \times 10^8\, m/s$$

$$\beta_1 = \frac{v_1}{c} = \frac{2.900 \times 10^8}{2.998 \times 10^8} = 0.967$$

$$v_2 = 2.988 \times 10^8\, m/s$$

$$\beta_2 = \frac{v_2}{c} = \frac{2.988 \times 10^8}{2.998 \times 10^8} = 0.997$$

Kv‡RB Avgiv wjL‡Z cwi:

$$\beta = \frac{\beta_1 + \beta_2}{1 + \beta_1\beta_2}$$

A_ev $\beta(1 + \beta_1\beta_2) = \beta_1 + \beta_2$

$$\beta + \beta\beta_1\beta_2 = \beta_1 + \beta_2$$

$$\beta_2(1 - \beta\beta_1) = \beta - \beta_1$$

$$\beta_2 = \frac{\beta - \beta_1}{1 - \beta\,\beta_1}$$

A_vr $\beta_2 = \frac{0.997 - 0.967}{1 - 0.997 \times 0.967} = 0.836$

$v_2 = 0.836c = 0.836 \times 2.998 \times 10^8\ m/s = 2.506 \times 10^8\ m/s$

7. gwU‡Z GKRb gvb‡li fi 100 kg, hLb †m GKUv i‡K‡U K‡i hw"Qj ZLb gwU‡Z _vKv GKR‡bi g‡b nj Zvi fi †e‡o 101 kg n‡q †M‡Q| i‡KUUv KZ †e‡M hw"Qj?

DËi: Avgiv Rwb Av‡cw¶K fi n‡"Q $m = \frac{m_0}{\sqrt{1 - \frac{v^2}{c^2}}}$

†hLv‡b m_0 n‡"Q w¯i Ae¯v‡bi fi| Kv‡RB Avgiv wjL‡Z cwi:

$$\sqrt{1 - \frac{v^2}{c^2}} = \frac{m_0}{m}$$

$$1 - \frac{v^2}{c^2} = \left(\frac{m_0}{m}\right)^2$$

$$\frac{v^2}{c^2} = 1 - \left(\frac{m_0}{m}\right)^2$$

$$\frac{v}{c} = \sqrt{1 - \left(\frac{m_0}{m}\right)^2}$$

$$\frac{v}{c} = \sqrt{1 - \left(\frac{100}{101}\right)^2} = 0.14$$

Kv‡RB $v = 0.14c = 0.14 \times 3 \times 10^8\ m/s = 4.2 \times 10^7\ m/s$

8. GKUv B‡jKU‡bi fi GKUv †cvU‡bi f‡ii mgvb nIqvi Rb¨ Zv‡K KZ †Rv‡i Q‡U †h‡Z n‡e?

DËi: B‡jKU‡bi fi: 9.11×10^{-31} *kg*

†cvU‡bi fi: 1.67×10^{-27} *kg*

hw` *v* †e‡M hvevi mgq B‡jKU‡bi fi †cvU‡bi f‡ii mgvb nq Zv n‡j:

$$1.67 \times 10^{-27} = \frac{9.11 \times 10^{-31}}{\sqrt{1 - \frac{v^2}{c^2}}}$$

$$\sqrt{1 - \frac{v^2}{c^2}} = \frac{9.11 \times 10^{-31}}{1.67 \times 10^{-27}}$$

$$(1 - \frac{v^2}{c^2}) = 5.45 \times 10^{-4}$$

A_vr $$\frac{v^2}{c^2} = 1 - 5.45 \times 10^{-4}$$

†`LvB hv‡"Q *v* wbðqB *c* Gi Le KvQvKwQ| KZUK KvQvKwQ †mUv Gfv‡e †ei Kiv mnR:

a‡i wbB *v* Gi mgvb gvb n‡"Q $v = (1 - \varepsilon)\, c$

†hLv‡b ε GKUv Le †QvU msL¨v|

†h‡nZ $$\left(\frac{v}{c}\right)^2 = 1 - 5.45 \times 10^{-4}$$

$$\frac{(1-\varepsilon)^2 c^2}{c^2} = 1 - 5.45 \times 10^{-4}$$

†h‡nZ ε^2 Le †QvU

$$1 - 2\varepsilon \cong 1 - 5.45 \times 10^{-4}$$

A_vr $$\varepsilon = \frac{5.45 \times 10^{-4}}{2} = 2.725 \times 10^{-4}$$

Kv‡RB Avgiv ej‡Z cvwi BjKU‡bi MwZ‡eM n‡e

$$v = 0.9997275c$$

9. $0.1 Mev$ B‡jKU‡bi MwZkw³ KZ, Av‡cw¶K mÎ bv _vK‡j Ges Av‡cw¶K mÎ e¨envi K‡i|

DËi: *Mev* n‡"Q wgwjlb B‡jKUb †fvë, GUv‡K †`‡LI †gv‡UI kw³i BDwbU g‡b n‡"Q bv, wKš GUv Avm‡j mwZ¨B kw³i BDwbU| GKUv B‡jKU‡bi PvR n‡"Q e=–1.60×10^{-19}Coulomb

†cvU‡bi Pv‡Ri cwigvY mgvb wKš †mUv cwRwUf| hw` GKUv B‡jKUb‡K 1 wgwjlb †fvë w`‡q kw³ c`vb Kiv nq Zvn‡j Zvi kw³‡K ejv nq 1 Mev. A_vr 1Mev n‡"Q

$1Mev = (1.60 \times 10^{-19}) \times 10^6 = 1.60 \times 10^{-13}$ *Joul*

B‡jKU‡bi fq n‡"Q 9.11×10^{-31} *kg*, Zvi c‡ivUK kw³‡Z i¦cvšwiZ Ki‡j †mUv n‡e

$m_0c^2 = 9.11 \times 10^{-31} \times (3 \times 10^8)^2 = 8.20 \times 10^{-14}$ *Joul*

Avgiv B‡"Q Ki‡j GB kw³Uv‡K *Mev* w`‡q cKvk Ki‡Z cvwi| A_vr:

$$m_0c^2 = \frac{8.20 \times 10^{-14}}{1.60 \times 10^{-13}} = 0.512 Mev$$

A_vr B‡jKU‡bi f‡ii Kvi‡Y Zvi †fZi †h kw³ _v‡K †mUv n‡"Q 0.512 Mev. c`v_weÁv‡bi †h-kvLvq cvigvYweK ev gnvRvMwZK KYv wb‡q Av‡jvPbv K‡i †mLv‡b i"wUb gwdK GKUv KYvi fi ejvi mgq A‡bK mg‡qB w¯Zve¯vq _vKvi mgq mwÂZ kw³‡K Zvi fi e‡j D‡jL Kiv nq| A_vr

B‡jKU‡bi fi: 0.512 *Mev*

†cvU‡bi fi: 942 *Mev*

Gevi Avgiv gj c‡k wd‡i Awm, B‡jKU‡bi MwZkw³ 0.1 *Mev* n‡j Zvi MwZ‡eM KZ| hw` Avgiv Av‡cw¶K mÎ e¨envi bv Kwi Zv n‡j wjL‡Z cvwi:

MwZ kw³ = $\frac{1}{2} mv^2 = 0.1 Mev = 0.1 \times 1.60 \times 10^{-13}$ *Joul*

$$v^2 = \frac{2\times 0.1\times 1.60\times 10^{-13}}{m}$$

$$v^2 = \frac{2\times 0.1\times 1.60\times 10^{-13}}{9.11\times 10^{-31}} = 3.51\times 10^{16}$$

$v = 1.87 \times 10^8 m/s = 0.561c$

Av‡cw¶K mÎ e¨envi Ki‡j Avgv‡`i wjL‡Z n‡e:

$$0.1Mev = \frac{m_0c^2}{\sqrt{1-\frac{v^2}{c^2}}} - m_0c^2$$

$$\frac{m_0c^2}{\sqrt{1-\frac{v^2}{c^2}}} = (m_0c^2 + 0.1)Mev$$

GLv‡b m_0c^2 Gi RvqMvq Avgiv 0.512 *Mev* wjL‡Z cvwi

$$\frac{0.512Mev}{\sqrt{1-\frac{v^2}{c^2}}} = (0.512 + 0.1)Mev$$

$$\sqrt{1-\frac{v^2}{c^2}} = \frac{0.512}{0.612}$$

$$1 - \frac{v^2}{c^2} = 0.837$$

$$\frac{v^2}{c^2} = 1 - 0.837$$

$$\frac{v}{c} = \sqrt{0.163}$$

Kv‡RB $v = 0.40c$

w_Iwi Ad wi‡jwUwfwU